Spare parts for:

Bar equipment

Suitable for:

GBG

This catalogue is automatically generated.
Therefore, the sequence of the items might not be always shown at best.
Updates will be issued in case of additions and/or amendments.
*Suitable **universal spare parts** may not be included*

Rel. 2013-09121832

BIG MAGIC 1

BIG MAGIC 1

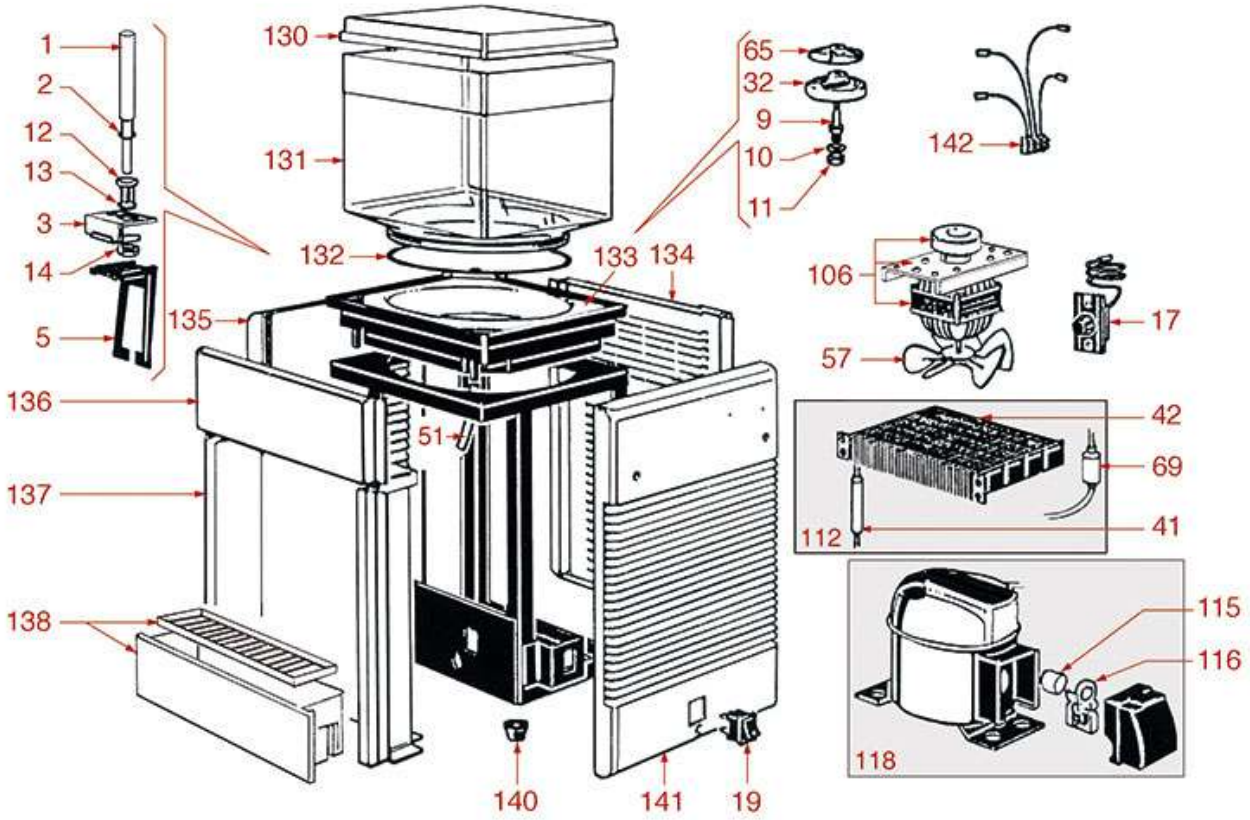

GBG0101

Positions without LF code no.: upon request

GBG

Position	LF code no.	Description
1	1198200	STAINLESS STEEL TAP SPINDLE
2	1186745	O-RING 0115 RED SILICONE
3	1198201	TAP LEVER SUPPORT
5	1198202	TAP HANDLE
9	1198203	HEXAGONAL SPINDLE
10	1198204	FIBRE WASHER
11	1198205	HEXAGONAL NUT FOR SPINDLE FIXING
12	1198206	BUSHING FOR TAP
13	3243069	O-RING OR 02068 EPDM
14	1198207	FIXING NUT FOR TAP BUSHING
17	1444107	THERMOSTAT RANCO K50 L3231
19	1319202	GREEN TWO-POLE SWITCH 16A 250V
32	1198208	MAGNETIC IMPELLER 4 PADDLES
32	1198209	MAGNETIC IMPELLER 8 PADDLES
65	1198045	SMALL COVER FOR IMPELLER
131	1198211	TANK 12 l
132	1186007	GASKET FOR 7/12 L TANK
140	1313304	RUBBER FOOT

BIG MAGIC 2

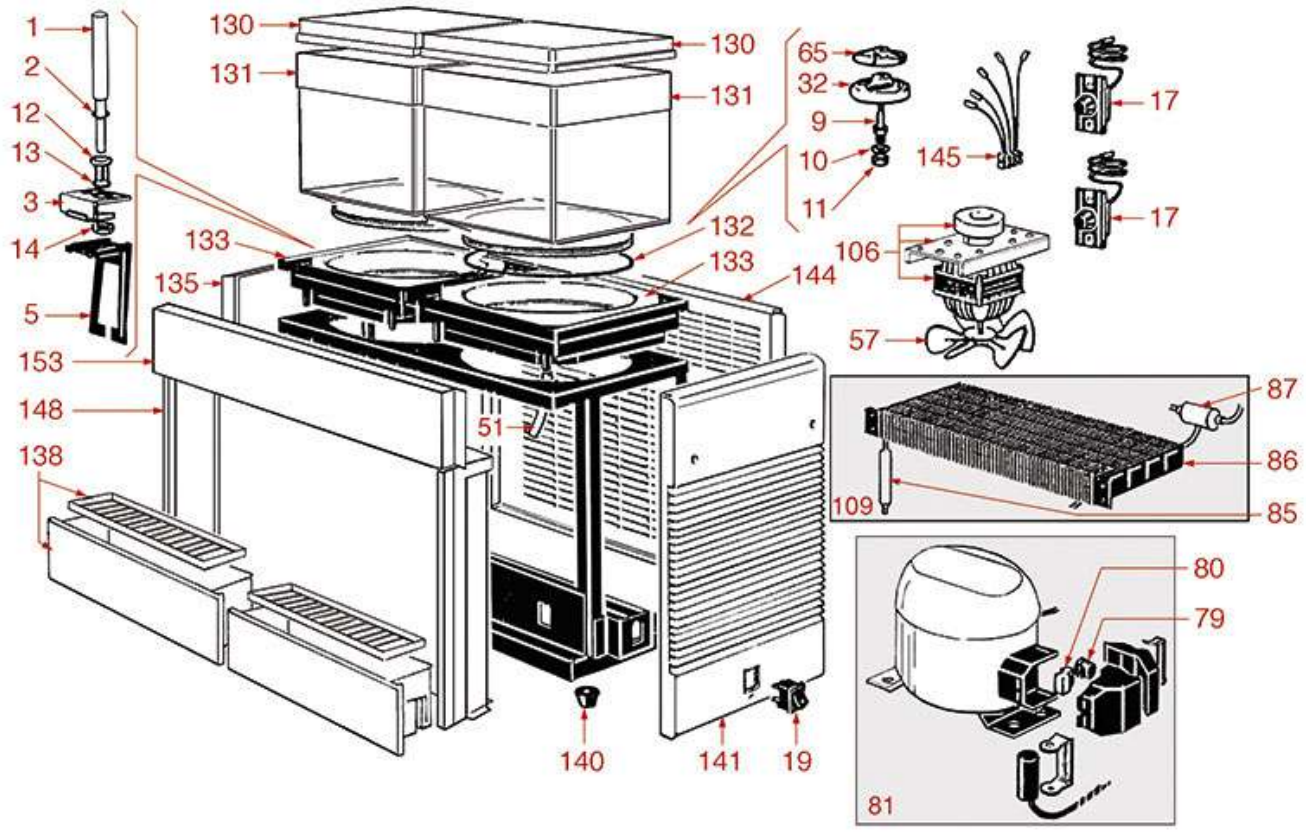

Positions without LF code no.: upon request

GBG

Position	LF code no.	Description
1	1198200	STAINLESS STEEL TAP SPINDLE
2	1186745	O-RING 0115 RED SILICONE
3	1198201	TAP LEVER SUPPORT
5	1198202	TAP HANDLE
9	1198203	HEXAGONAL SPINDLE
10	1198204	FIBRE WASHER
11	1198205	HEXAGONAL NUT FOR SPINDLE FIXING
12	1198206	BUSHING FOR TAP
13	3243069	O-RING OR 02068 EPDM
14	1198207	FIXING NUT FOR TAP BUSHING
17	1444107	THERMOSTAT RANCO K50 L3231
19	1319202	GREEN TWO-POLE SWITCH 16A 250V
32	1198208	MAGNETIC IMPELLER 4 PADDLES
32	1198209	MAGNETIC IMPELLER 8 PADDLES
65	1198045	SMALL COVER FOR IMPELLER
131	1198211	TANK 12 l
132	1186007	GASKET FOR 7/12 L TANK
140	1313304	RUBBER FOOT

BIG MAGIC 3

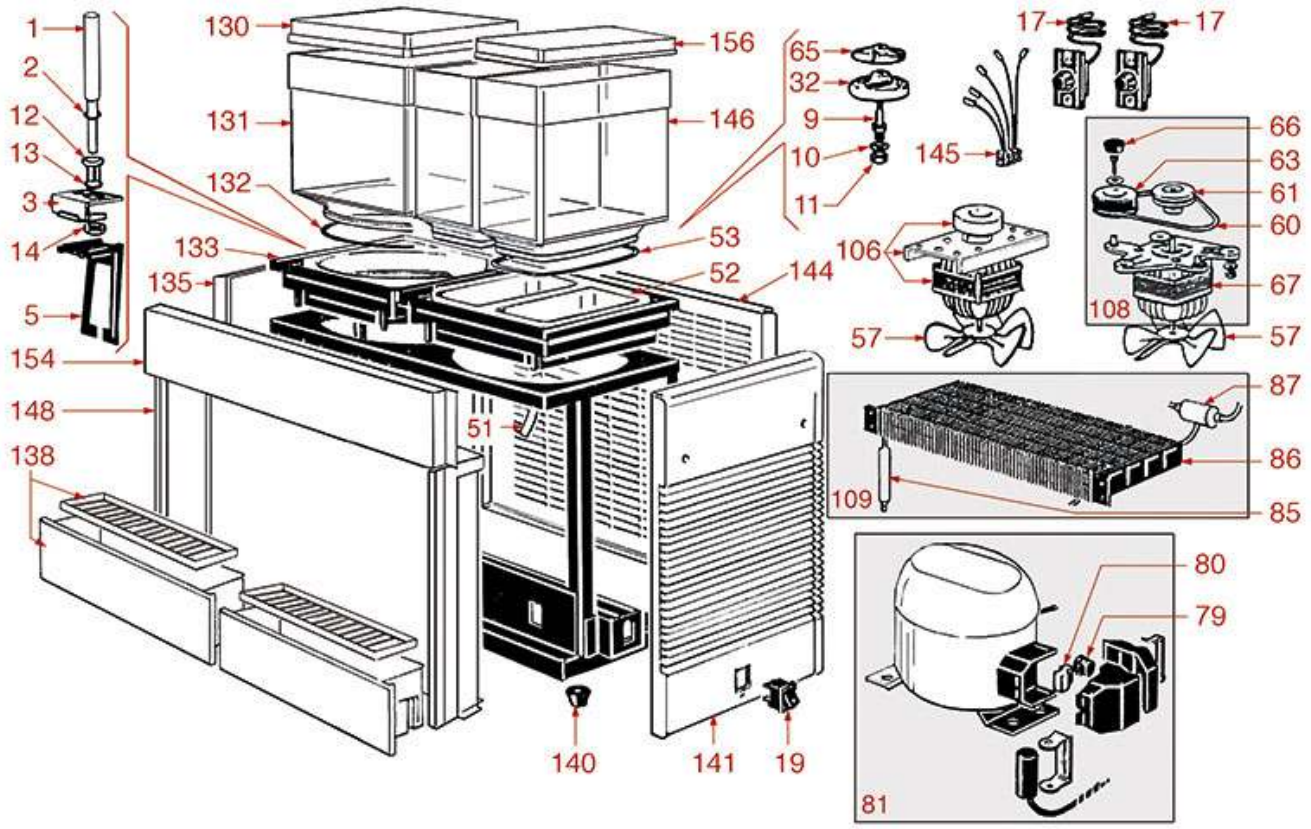

Positions without LF code no.: upon request

GBG

Position	LF code no.	Description
1	1198200	STAINLESS STEEL TAP SPINDLE
2	1186745	O-RING 0115 RED SILICONE
3	1198201	TAP LEVER SUPPORT
5	1198202	TAP HANDLE
9	1198203	HEXAGONAL SPINDLE
10	1198204	FIBRE WASHER
11	1198205	HEXAGONAL NUT FOR SPINDLE FIXING
12	1198206	BUSHING FOR TAP
13	3243069	O-RING OR 02068 EPDM
14	1198207	FIXING NUT FOR TAP BUSHING
17	1444107	THERMOSTAT RANCO K50 L3231
19	1319202	GREEN TWO-POLE SWITCH 16A 250V
32	1198208	MAGNETIC IMPELLER 4 PADDLES
32	1198209	MAGNETIC IMPELLER 8 PADDLES
53	1186530	TANK GASKET
60	1198216	TRANSMISSION BELT
63	1198218	MAGNETIC TRANSMISSION PULLEY
65	1198045	SMALL COVER FOR IMPELLER
131	1198211	TANK 12 l
132	1186007	GASKET FOR 7/12 L TANK
140	1313304	RUBBER FOOT
146	1198046	RECTANGULAR TANK 6 L

SMALL MAGIC 1

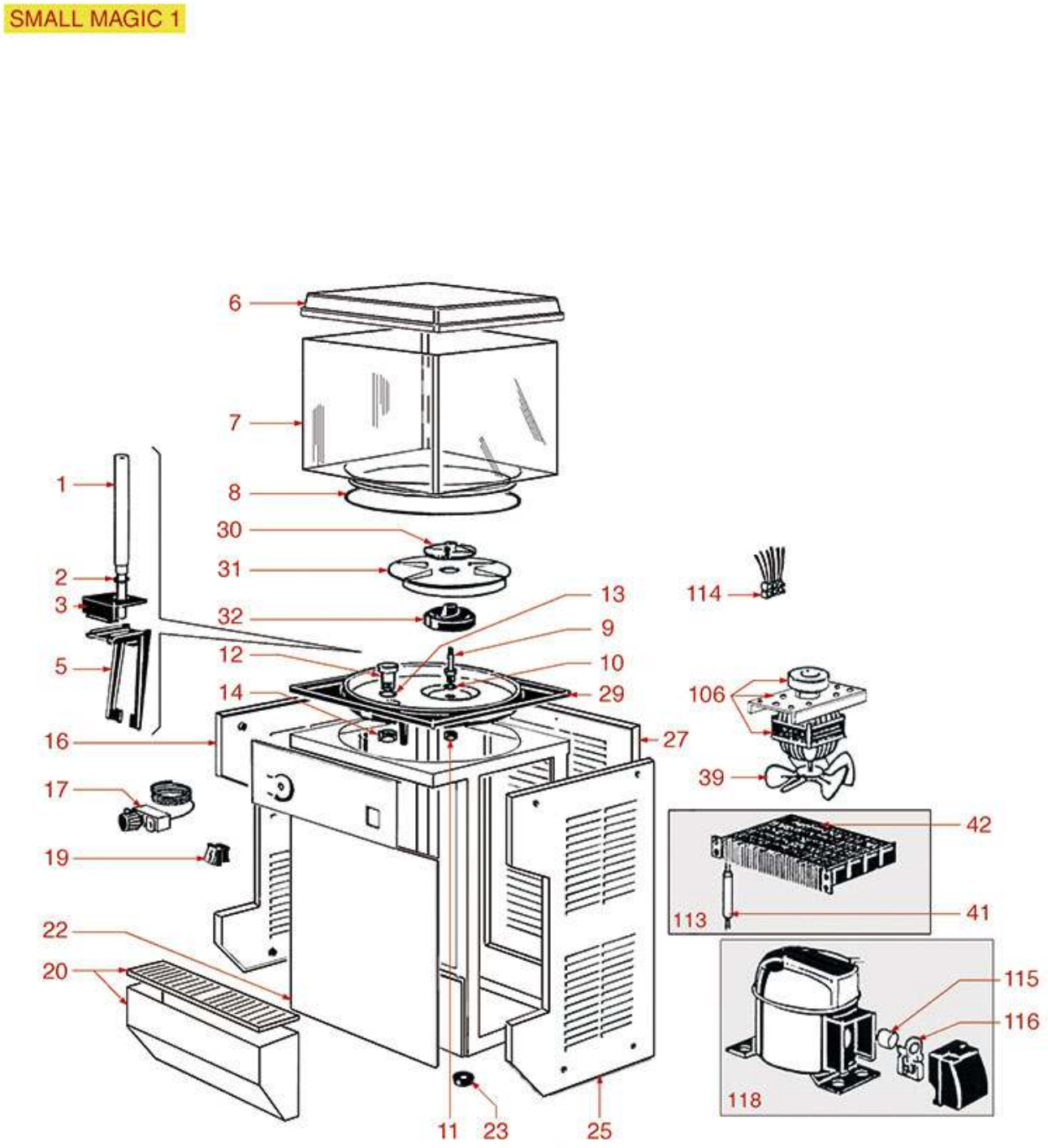

Positions without LF code no.: upon request

GBG

Position	LF code no.	Description
1	1198200	STAINLESS STEEL TAP SPINDLE
2	1186745	O-RING 0115 RED SILICONE
3	1198201	TAP LEVER SUPPORT
5	1198202	TAP HANDLE
7	1198214	SQUARE TANK 7 L
8	1186007	GASKET FOR 7/12 L TANK
9	1198203	HEXAGONAL SPINDLE
10	1198204	FIBRE WASHER
11	1198205	HEXAGONAL NUT FOR SPINDLE FIXING
12	1198206	BUSHING FOR TAP
13	3243069	O-RING OR 02068 EPDM
14	1198207	FIXING NUT FOR TAP BUSHING
17	1444107	THERMOSTAT RANCO K50 L3231
19	1319202	GREEN TWO-POLE SWITCH 16A 250V
20	1198215	PLASTIC TRAY WITH GRID
23	1313304	RUBBER FOOT
30	1198045	SMALL COVER FOR IMPELLER
32	1198209	MAGNETIC IMPELLER 8 PADDLES
106	1240021	MOTOR EMI 10W 82B-2010/01

SMALL MAGIC 1

SMALL MAGIC 2

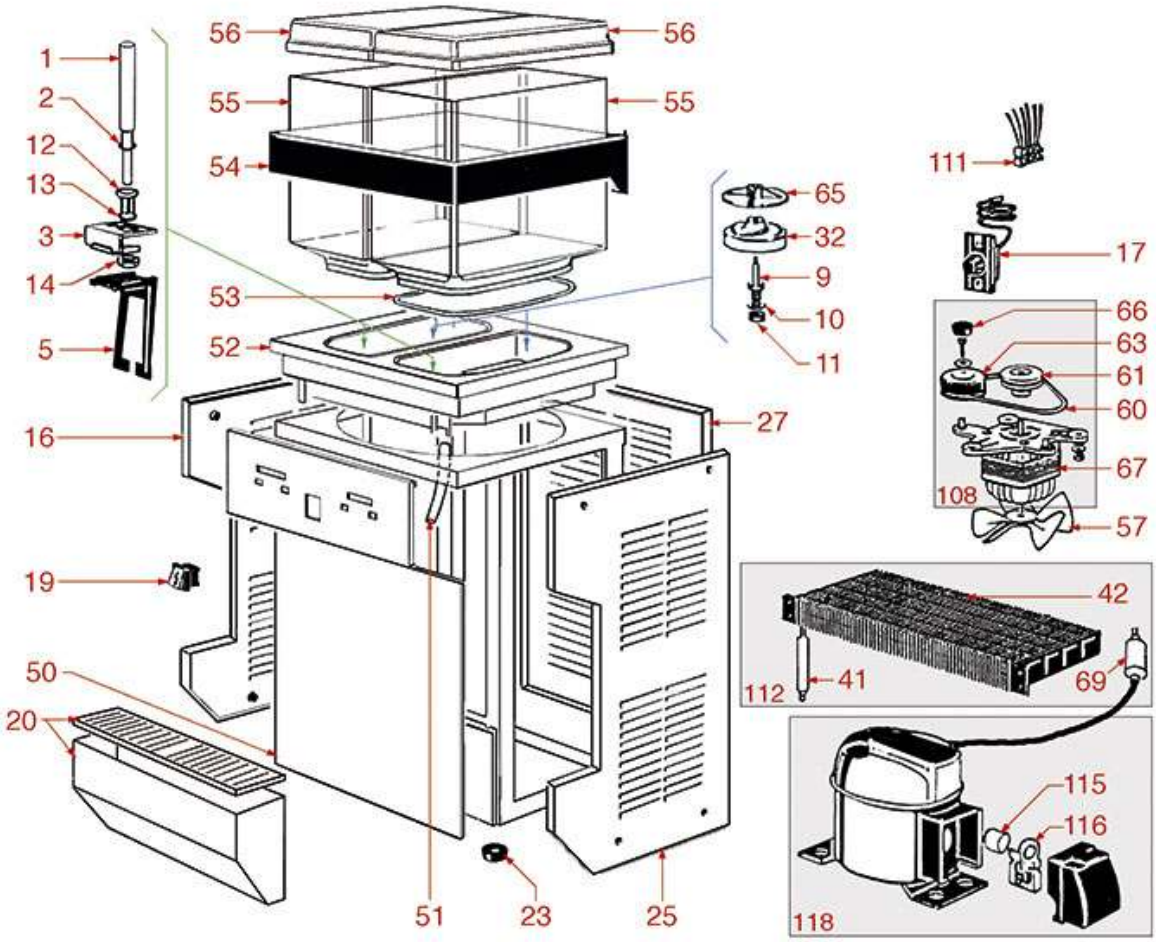

GBG0501

Positions without LF code no.: upon request

GBG

Position	LF code no.	Description
1	1198200	STAINLESS STEEL TAP SPINDLE
2	1186745	O-RING 0115 RED SILICONE
3	1198201	TAP LEVER SUPPORT
5	1198202	TAP HANDLE
9	1198203	HEXAGONAL SPINDLE
10	1198204	FIBRE WASHER
11	1198205	HEXAGONAL NUT FOR SPINDLE FIXING
12	1198206	BUSHING FOR TAP
13	3243069	O-RING OR 02068 EPDM
14	1198207	FIXING NUT FOR TAP BUSHING
17	1444107	THERMOSTAT RANCO K50 L3231
19	1319202	GREEN TWO-POLE SWITCH 16A 250V
20	1198215	PLASTIC TRAY WITH GRID
23	1313304	RUBBER FOOT
32	1198208	MAGNETIC IMPELLER 4 PADDLES
32	1198209	MAGNETIC IMPELLER 8 PADDLES
53	1186530	TANK GASKET
55	1198046	RECTANGULAR TANK 6 L
60	1198216	TRANSMISSION BELT
63	1198218	MAGNETIC TRANSMISSION PULLEY
65	1198045	SMALL COVER FOR IMPELLER
67	5023964	MOTOR ELCO 16W VNT 16-25/0/1

SMALL MAGIC 3

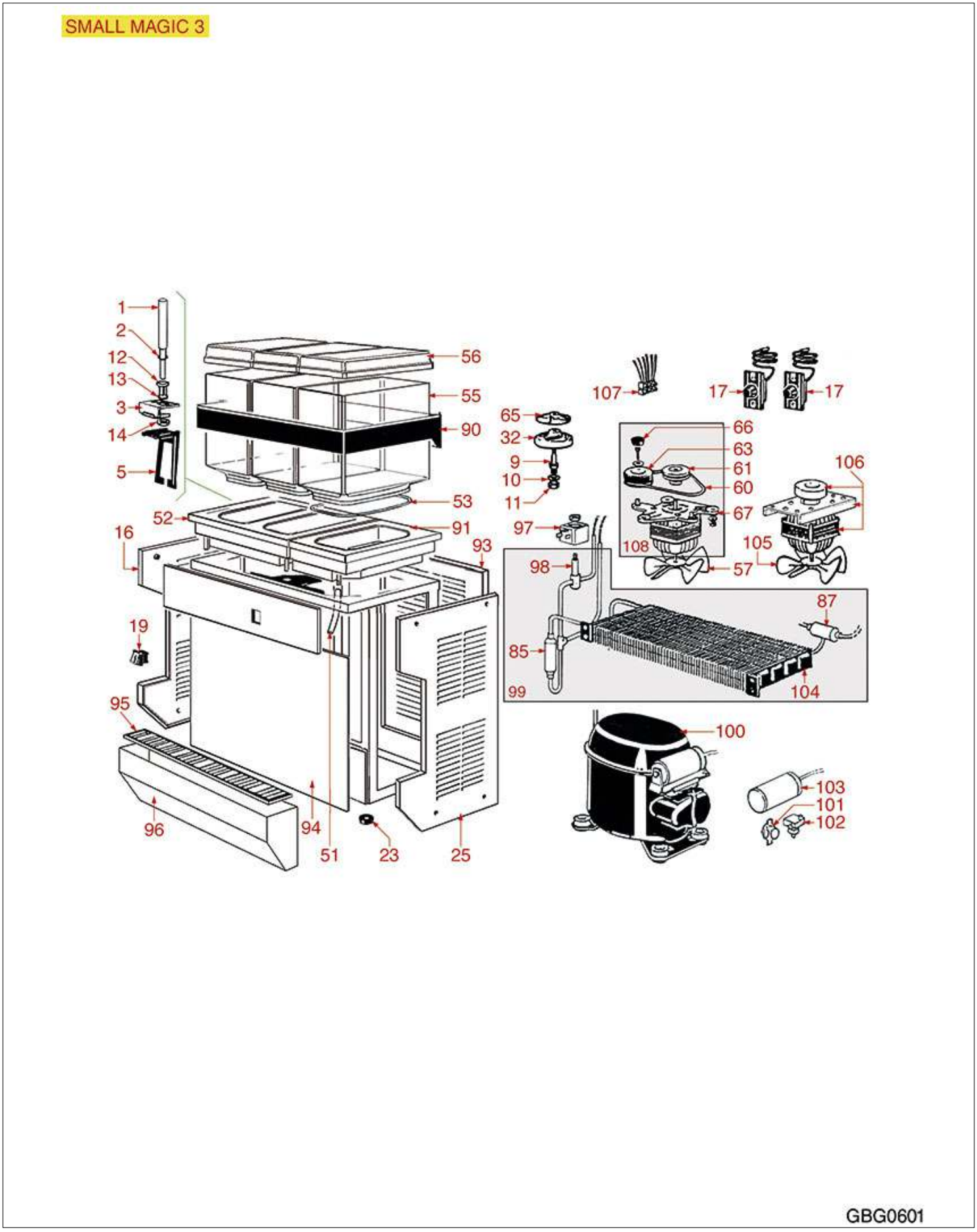

Positions without LF code no.: upon request

GBG

Position	LF code no.	Description
1	1198200	STAINLESS STEEL TAP SPINDLE
2	1186745	O-RING 0115 RED SILICONE
3	1198201	TAP LEVER SUPPORT
5	1198202	TAP HANDLE
9	1198203	HEXAGONAL SPINDLE
10	1198204	FIBRE WASHER
11	1198205	HEXAGONAL NUT FOR SPINDLE FIXING
12	1198206	BUSHING FOR TAP
13	3243069	O-RING OR 02068 EPDM
14	1198207	FIXING NUT FOR TAP BUSHING
17	1444107	THERMOSTAT RANCO K50 L3231
19	1319202	GREEN TWO-POLE SWITCH 16A 250V
23	1313304	RUBBER FOOT
32	1198208	MAGNETIC IMPELLER 4 PADDLES
32	1198209	MAGNETIC IMPELLER 8 PADDLES
53	1186530	TANK GASKET
55	1198046	RECTANGULAR TANK 6 L
60	1198216	TRANSMISSION BELT
63	1198218	MAGNETIC TRANSMISSION PULLEY
65	1198045	SMALL COVER FOR IMPELLER
67	5023964	MOTOR ELCO 16W VNT 16-25/0/1
97	3120032	COIL PARKER ZB09 9W 220/240V 50/60Hz
106	1240021	MOTOR EMI 10W 82B-2010/01

SMALL MAGIC 4

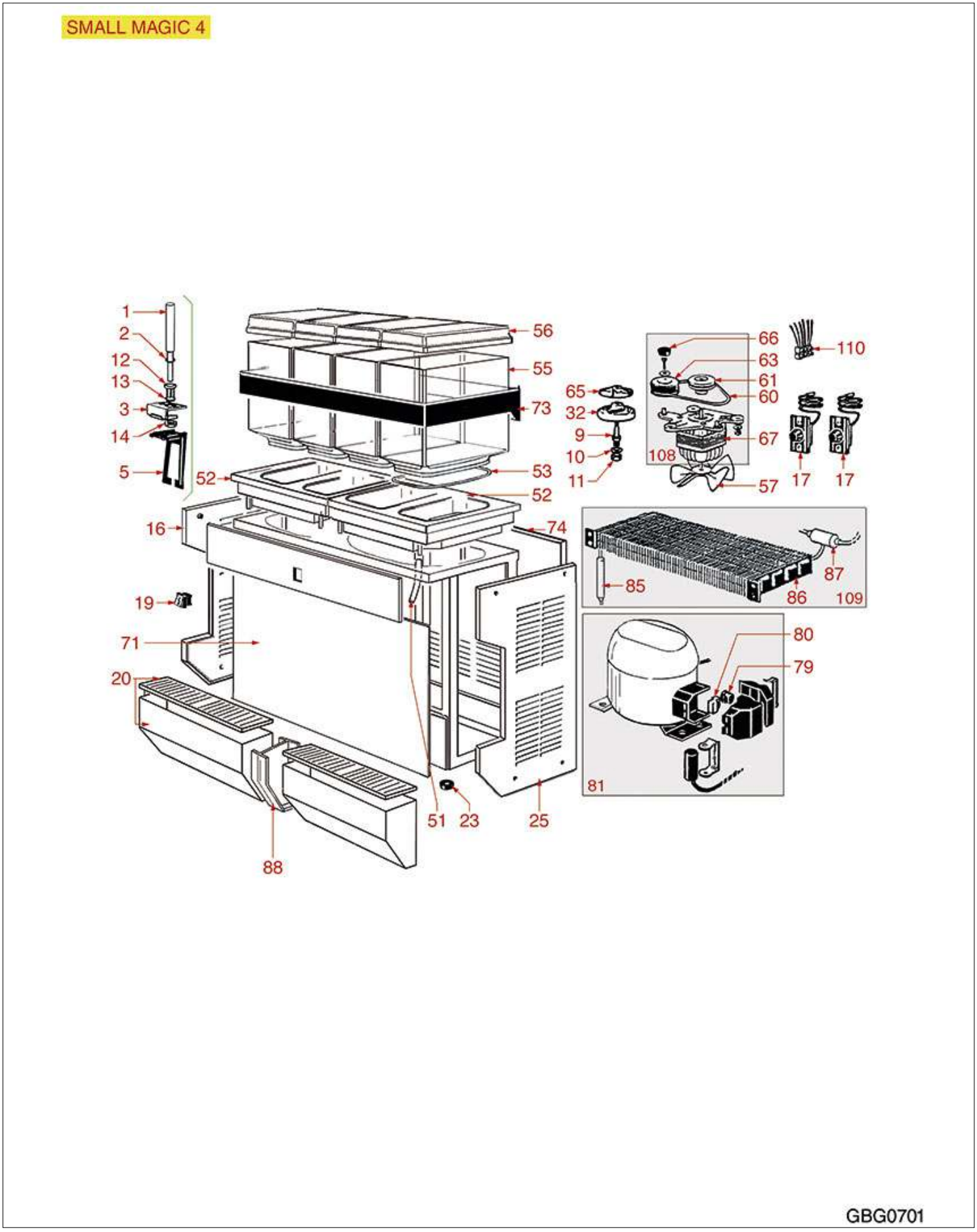

Positions without LF code no.: upon request

GBG

Position	LF code no.	Description
1	1198200	STAINLESS STEEL TAP SPINDLE
2	1186745	O-RING 0115 RED SILICONE
3	1198201	TAP LEVER SUPPORT
5	1198202	TAP HANDLE
9	1198203	HEXAGONAL SPINDLE
10	1198204	FIBRE WASHER
11	1198205	HEXAGONAL NUT FOR SPINDLE FIXING
12	1198206	BUSHING FOR TAP
13	3243069	O-RING OR 02068 EPDM
14	1198207	FIXING NUT FOR TAP BUSHING
17	1444107	THERMOSTAT RANCO K50 L3231
19	1319202	GREEN TWO-POLE SWITCH 16A 250V
20	1198215	PLASTIC TRAY WITH GRID
23	1313304	RUBBER FOOT
32	1198208	MAGNETIC IMPELLER 4 PADDLES
32	1198209	MAGNETIC IMPELLER 8 PADDLES
53	1186530	TANK GASKET
55	1198046	RECTANGULAR TANK 6 L
60	1198216	TRANSMISSION BELT
63	1198218	MAGNETIC TRANSMISSION PULLEY
65	1198045	SMALL COVER FOR IMPELLER
67	5023964	MOTOR ELCO 16W VNT 16-25/0/1

GRANISTAR 12-1

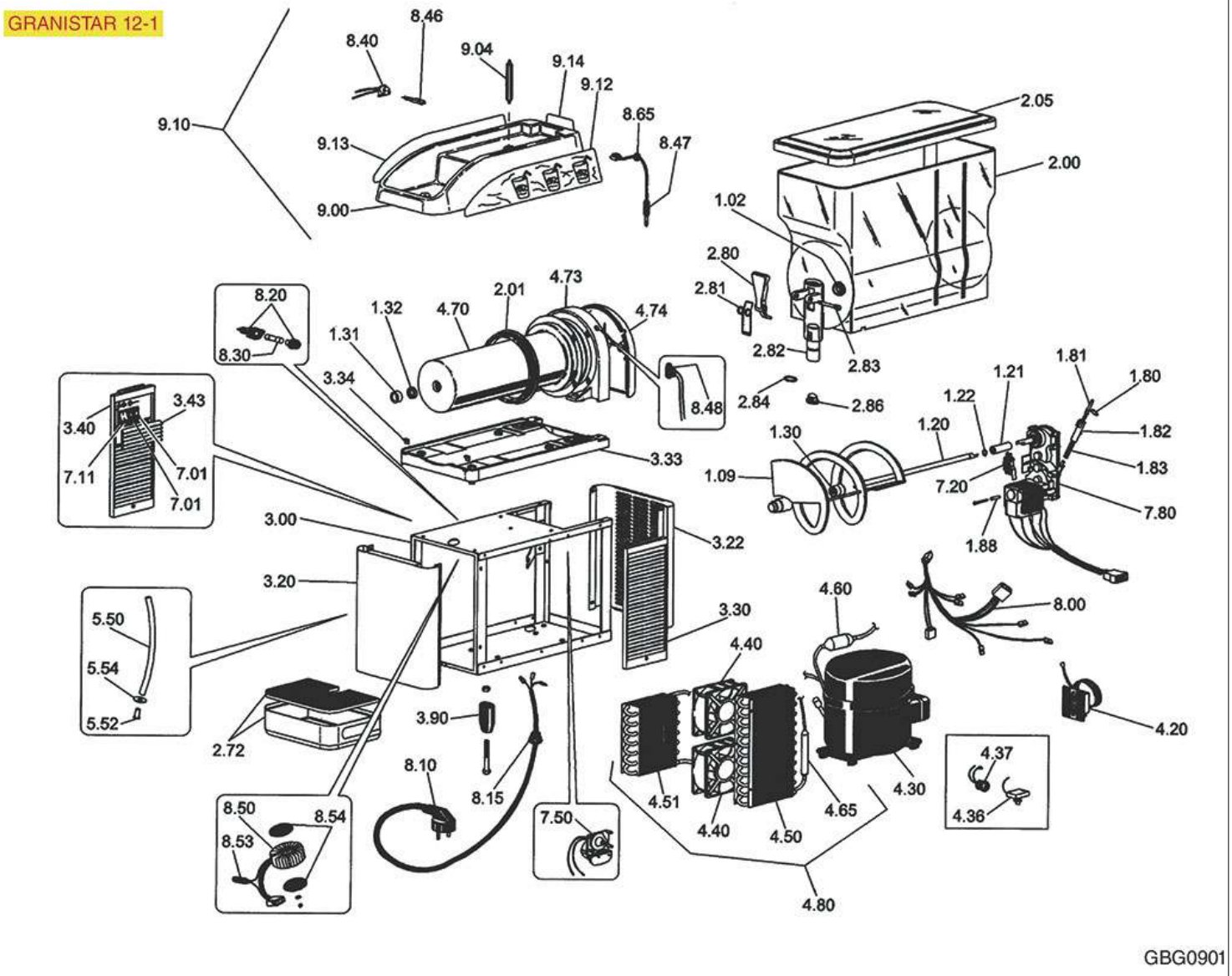

Positions without LF code no.: upon request

GBG

Position	LF code no.	Description
109	1199508	SCROLL GRANITA MACHINE
120	1199518	SHAFT COUPLING WITH BUSHING
121	1199518	SHAFT COUPLING WITH BUSHING
122	1199323	ST.STEEL RETAINER RING A-12 UNI 7435
131	1199335	EVAPORATOR BUSHING
132	1186539	SILICONE OIL SEAL UNIT
180	1199515	RETAINER FOR DENSITY ADJUSTMENT
181	1199516	PIN FOR DENSITY ADJUSTMENT
182	1199311	SPRING GUIDE FOR ADJUSTMENT SYSTEM
183	1250701	SPRING FOR DENSITY ADJUSTMENT
200	1199512	TANK WITH UL LOCKING SYSTEM 12 l
201	1199322	EVAPORATOR GASKET ø 170 mm
205	1199544	BLUE LID
205	1199545	TRANSPARENT LID UL
280	1199534	TAP HANDLE
280	1357025	BLACK TAP CONTROL LEVER
281	1199339	TAP SPRING
283	1199350	SPINDLE FOR TAP LEVER
283	1199505	TAP BODY
283	1357026	DELIVERY TAP CLASP
284	1186000	O-RING 0123 RED SILICONE
286	1199342	TAP CAP
330	1199119	GRANITA MACHINE SIDE 310x106 mm
334	1199514	CLIP FOR TANK HOOKING
390	1313301	SUPPORTING FOOT H=100 mm UL
440	3240501	AXIAL VENTILATOR SUNON 120x120x38 mm
701	3319468	BLACK SINGLE POLE SWITCH 16A 250V
711	1319202	GREEN TWO-POLE SWITCH 16A 250V
720	1199309	MICROSWITCH 5A 250V
750	1446500	TIMER BIGATTI D94
780	1240201	GEAR MOTOR KENTA K9357505B
780	1240301	GEARMOTOR ELCO FR10-40-33 216
846	3221250	NEUTRAL HALOGEN LAMP G4 10W 12V
910	1199545	TRANSPARENT LID UL

GRANISTAR 12-2

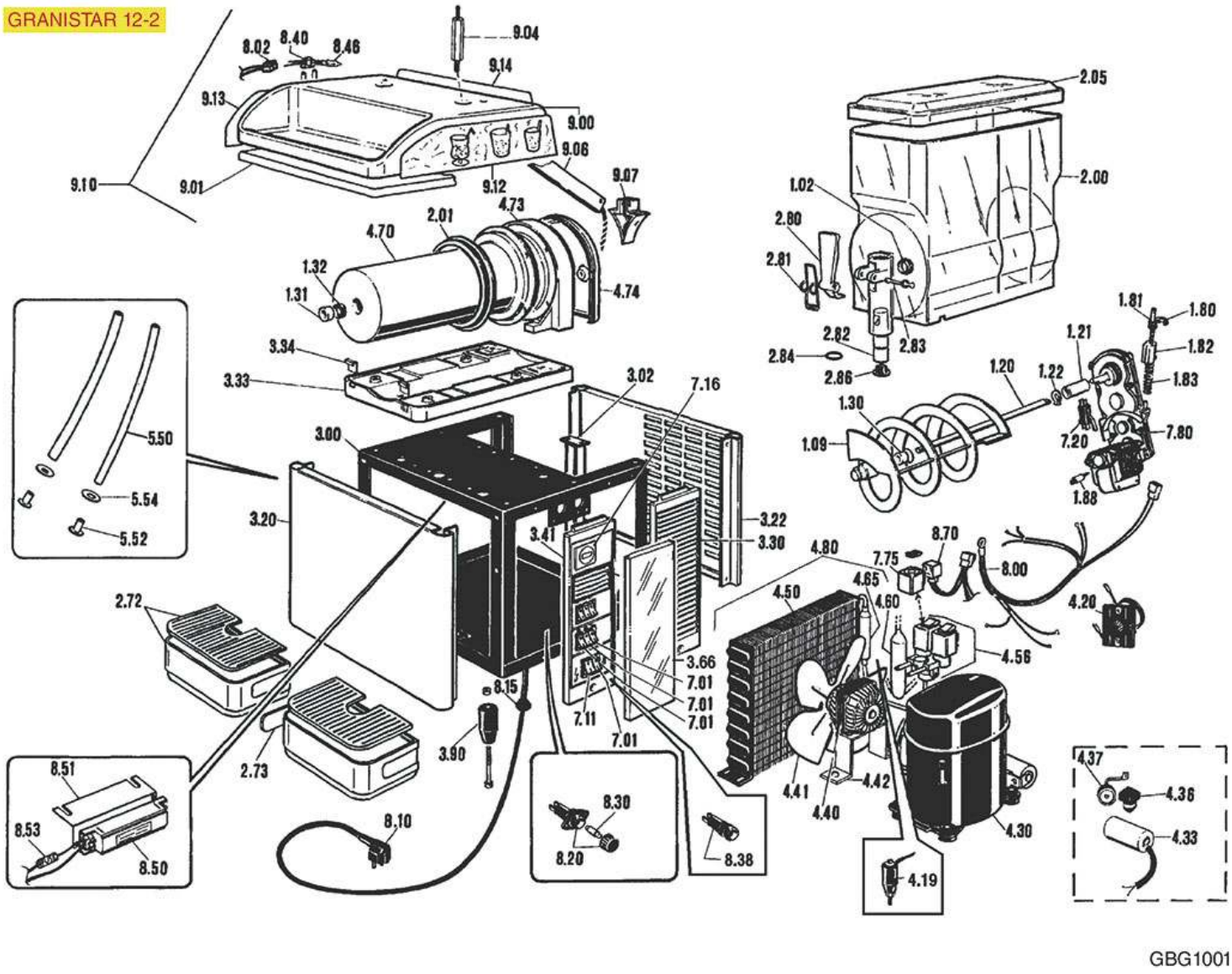

Positions without LF code no.: upon request

GBG

Position	LF code no.	Description
109	1199508	SCROLL GRANITA MACHINE
120	1199518	SHAFT COUPLING WITH BUSHING
121	1199518	SHAFT COUPLING WITH BUSHING
122	1199323	ST.STEEL RETAINER RING A-12 UNI 7435
130	1186002	SUCTION GASKET FOR SCRAPER HOOKING
131	1199335	EVAPORATOR BUSHING
180	1199515	RETAINER FOR DENSITY ADJUSTMENT
181	1199516	PIN FOR DENSITY ADJUSTMENT
182	1199311	SPRING GUIDE FOR ADJUSTMENT SYSTEM
183	1250701	SPRING FOR DENSITY ADJUSTMENT
200	1199512	TANK WITH UL LOCKING SYSTEM 12 l
201	1199322	EVAPORATOR GASKET ø 170 mm
205	1199544	BLUE LID
205	1199545	TRANSPARENT LID UL
280	1199534	TAP HANDLE
280	1357025	BLACK TAP CONTROL LEVER
281	1199339	TAP SPRING
282	1199505	TAP BODY
283	1199350	SPINDLE FOR TAP LEVER
283	1357026	DELIVERY TAP CLASP
284	1186000	O-RING 0123 RED SILICONE
286	1199342	TAP CAP
330	1199119	GRANITA MACHINE SIDE 310x106 mm
334	1199514	CLIP FOR TANK HOOKING
390	1313301	SUPPORTING FOOT H=100 mm UL
420	1444107	THERMOSTAT RANCO K50 L3231
440	1240104	MOTOR FAN 16W 230V 50/60Hz
441	3240964	SUCTION BLADE ø 250 mm 28°
456	1120253	2-WAY SOLENOID VALVE CEME
701	3319468	BLACK SINGLE POLE SWITCH 16A 250V
711	1319202	GREEN TWO-POLE SWITCH 16A 250V
720	1199309	MICROSWITCH 5A 250V
775	1120362	COIL PARKER WB4.5 6W 220/230V 50/60Hz
775	1199316	COIL CEME B4 230V 50 Hz
780	1240201	GEAR MOTOR KENTA K9357505B
780	1240301	GEARMOTOR ELCO FR10-40-33 216
846	3221250	NEUTRAL HALOGEN LAMP G4 10W 12V

GRANISTAR 12-3

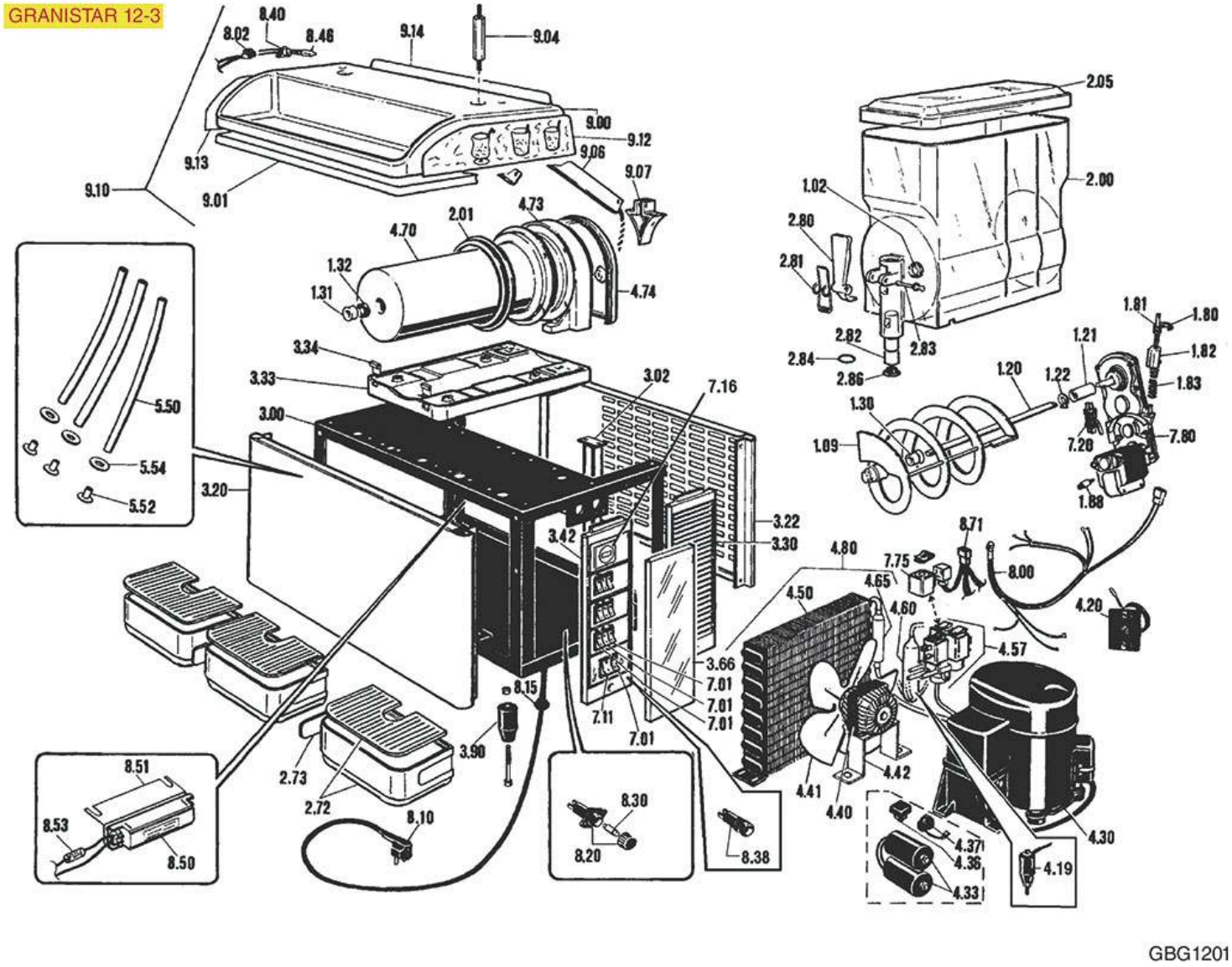

Positions without LF code no.: upon request

GBG

Position	LF code no.	Description
109	1199508	SCROLL GRANITA MACHINE
120	1199518	SHAFT COUPLING WITH BUSHING
121	1199518	SHAFT COUPLING WITH BUSHING
122	1199323	ST.STEEL RETAINER RING A-12 UNI 7435
130	1186002	SUCTION GASKET FOR SCRAPER HOOKING
131	1199335	EVAPORATOR BUSHING
132	1186539	SILICONE OIL SEAL UNIT
180	1199515	RETAINER FOR DENSITY ADJUSTMENT
181	1199516	PIN FOR DENSITY ADJUSTMENT
182	1199311	SPRING GUIDE FOR ADJUSTMENT SYSTEM
183	1250701	SPRING FOR DENSITY ADJUSTMENT
200	1199512	TANK WITH UL LOCKING SYSTEM 12 l
201	1199322	EVAPORATOR GASKET ø 170 mm
205	1199544	BLUE LID
205	1199545	TRANSPARENT LID UL
280	1199534	TAP HANDLE
280	1357025	BLACK TAP CONTROL LEVER
281	1199339	TAP SPRING
282	1199505	TAP BODY
283	1199350	SPINDLE FOR TAP LEVER
283	1357026	DELIVERY TAP CLASP
284	1186000	O-RING 0123 RED SILICONE
286	1199342	TAP CAP
330	1199119	GRANITA MACHINE SIDE 310x106 mm
334	1199514	CLIP FOR TANK HOOKING
390	1313301	SUPPORTING FOOT H=100 mm UL
420	1444107	THERMOSTAT RANCO K50 L3231
440	1240106	MOTOR FAN 25W 230V 50/60Hz
457	1120602	SOLENOID VALVE CEME 5935 3-WAY
701	3319468	BLACK SINGLE POLE SWITCH 16A 250V
711	1319202	GREEN TWO-POLE SWITCH 16A 250V
720	1199309	MICROSWITCH 5A 250V
775	1120362	COIL PARKER WB4.5 6W 220/230V 50/60Hz
775	1199316	COIL CEME B4 230V 50 Hz
780	1240201	GEAR MOTOR KENTA K9357505B
780	1240301	GEARMOTOR ELCO FR10-40-33 216
846	3221250	NEUTRAL HALOGEN LAMP G4 10W 12V

GRANISHERBET 8-1

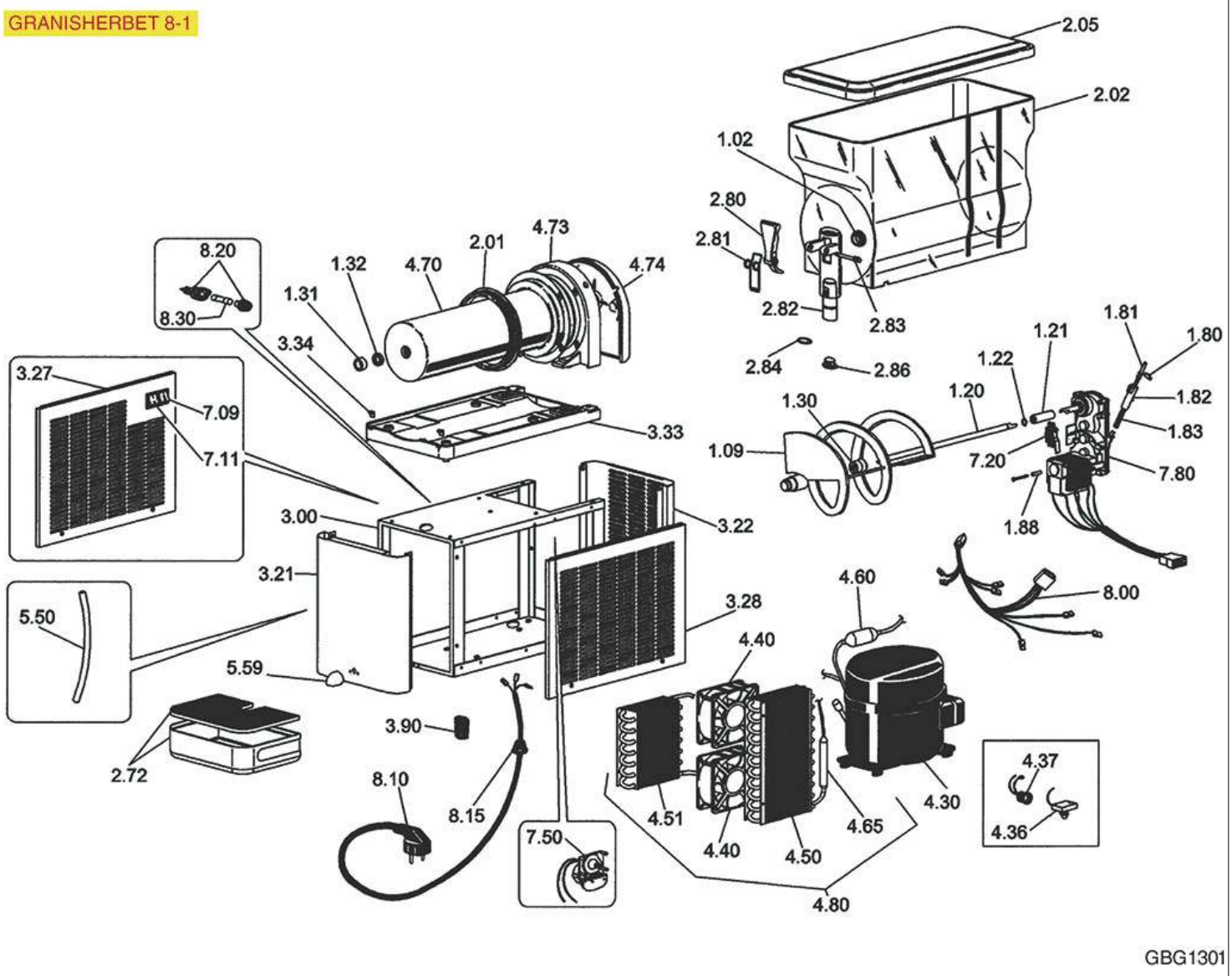

Positions without LF code no.: upon request

GBG

Position	LF code no.	Description
109	1199508	SCROLL GRANITA MACHINE
120	1199518	SHAFT COUPLING WITH BUSHING
121	1199518	SHAFT COUPLING WITH BUSHING
122	1199323	ST.STEEL RETAINER RING A-12 UNI 7435
130	1186002	SUCTION GASKET FOR SCRAPER HOOKING
131	1199335	EVAPORATOR BUSHING
132	1186539	SILICONE OIL SEAL UNIT
180	1199515	RETAINER FOR DENSITY ADJUSTMENT
181	1199516	PIN FOR DENSITY ADJUSTMENT
182	1199311	SPRING GUIDE FOR ADJUSTMENT SYSTEM
183	1250701	SPRING FOR DENSITY ADJUSTMENT
201	1199322	EVAPORATOR GASKET ø 170 mm
202	1199547	TANK 8 L
205	1199544	BLUE LID
205	1199545	TRANSPARENT LID UL
280	1199534	TAP HANDLE
280	1357025	BLACK TAP CONTROL LEVER
281	1199339	TAP SPRING
282	1199505	TAP BODY
283	1199350	SPINDLE FOR TAP LEVER
283	1357026	DELIVERY TAP CLASP
284	1186000	O-RING 0123 RED SILICONE
286	1199342	TAP CAP
334	1199514	CLIP FOR TANK HOOKING
390	1313300	SUPPORTING FOOT H=40 mm
440	3240501	AXIAL VENTILATOR SUNON 120x120x38 mm
709	1319702	ON-OFF-ON SELECTOR SWITCH
711	1319202	GREEN TWO-POLE SWITCH 16A 250V
720	1199309	MICROSWITCH 5A 250V
750	1446500	TIMER BIGATTI D94
780	1240201	GEAR MOTOR KENTA K9357505B
780	1240301	GEARMOTOR ELCO FR10-40-33 216

GRANISHERBET 8-2

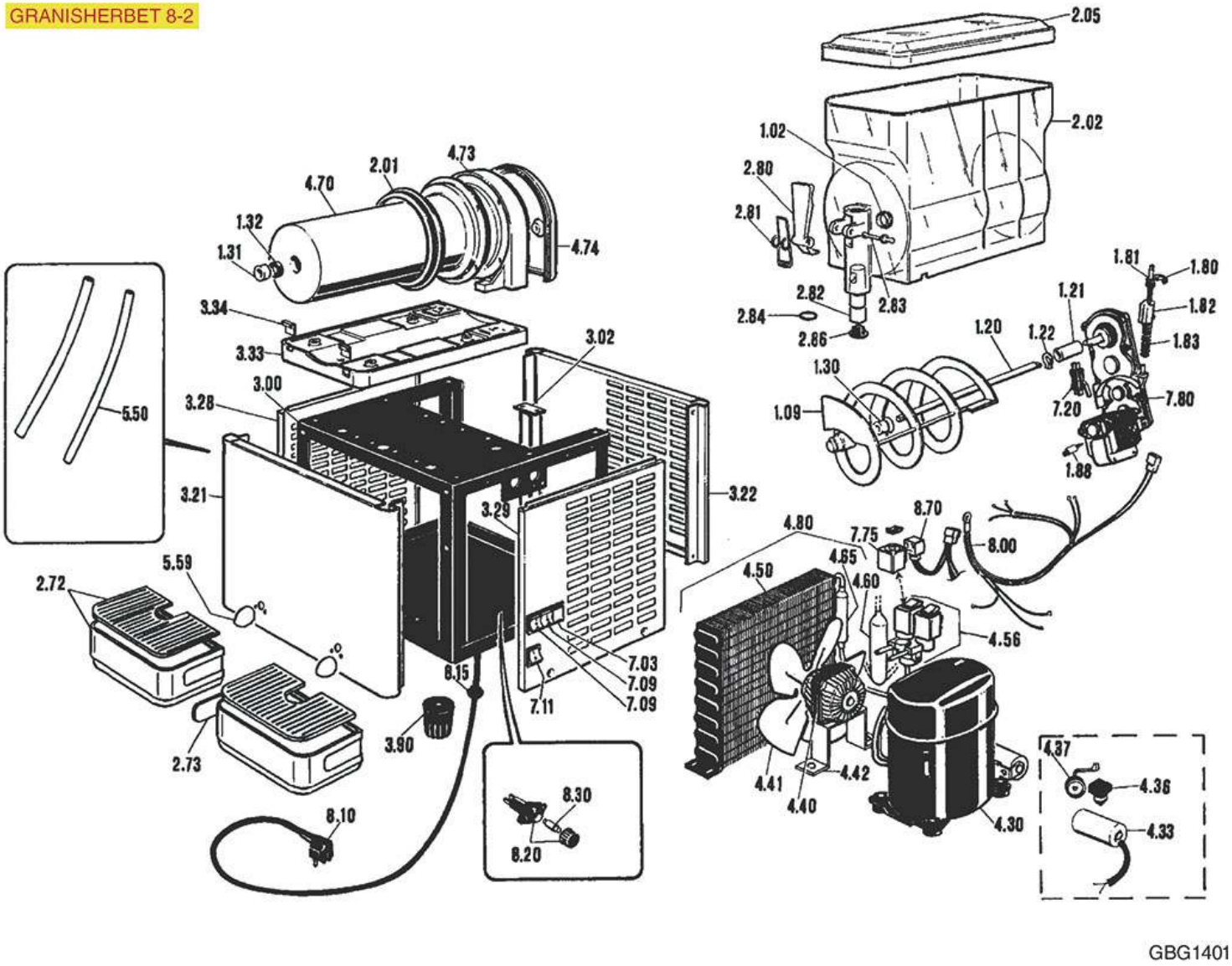

Positions without LF code no.: upon request

GBG

Position	LF code no.	Description
109	1199508	SCROLL GRANITA MACHINE
120	1199518	SHAFT COUPLING WITH BUSHING
121	1199518	SHAFT COUPLING WITH BUSHING
122	1199323	ST.STEEL RETAINER RING A-12 UNI 7435
131	1199335	EVAPORATOR BUSHING
180	1199515	RETAINER FOR DENSITY ADJUSTMENT
181	1199516	PIN FOR DENSITY ADJUSTMENT
182	1199311	SPRING GUIDE FOR ADJUSTMENT SYSTEM
183	1250701	SPRING FOR DENSITY ADJUSTMENT
201	1199322	EVAPORATOR GASKET ø 170 mm
202	1199547	TANK 8 L
205	1199544	BLUE LID
205	1199545	TRANSPARENT LID UL
280	1199534	TAP HANDLE
280	1357025	BLACK TAP CONTROL LEVER
281	1199339	TAP SPRING
282	1199505	TAP BODY
283	1199350	SPINDLE FOR TAP LEVER
283	1357026	DELIVERY TAP CLASP
284	1186000	O-RING 0123 RED SILICONE
286	1199342	TAP CAP
334	1199514	CLIP FOR TANK HOOKING
390	1313300	SUPPORTING FOOT H=40 mm
440	1240104	MOTOR FAN 16W 230V 50/60Hz
441	3240964	SUCTION BLADE ø 250 mm 28°
456	1120253	2-WAY SOLENOID VALVE CEME
709	1319702	ON-OFF-ON SELECTOR SWITCH
711	1319202	GREEN TWO-POLE SWITCH 16A 250V
720	1199309	MICROSWITCH 5A 250V
775	1120362	COIL PARKER WB4.5 6W 220/230V 50/60Hz
775	1199316	COIL CEME B4 230V 50 Hz
780	1240201	GEAR MOTOR KENTA K9357505B
780	1240301	GEARMOTOR ELCO FR10-40-33 216

GRANISHERBET 8-3

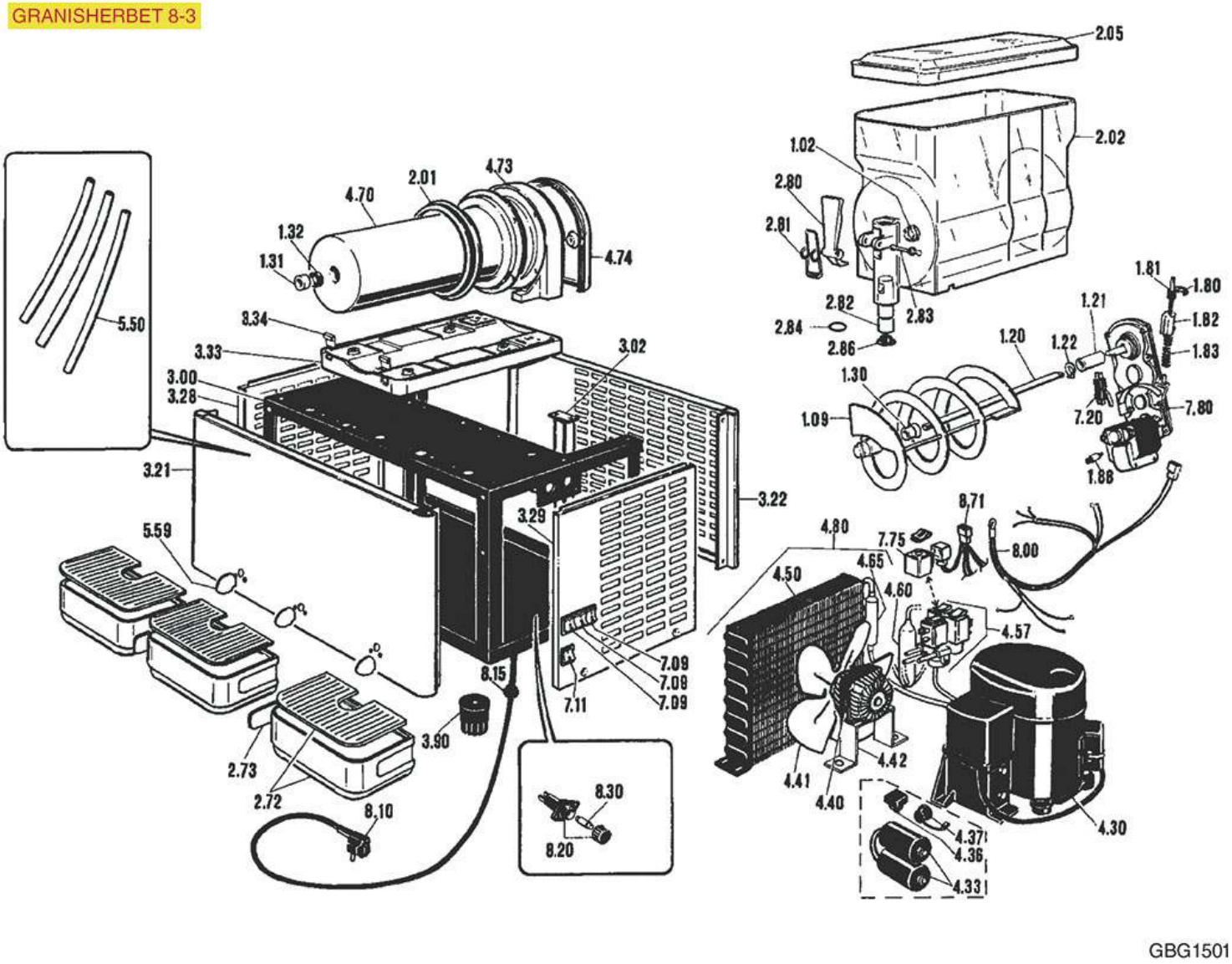

Positions without LF code no.: upon request

GBG

Position	LF code no.	Description
109	1199508	SCROLL GRANITA MACHINE
120	1199518	SHAFT COUPLING WITH BUSHING
121	1199518	SHAFT COUPLING WITH BUSHING
122	1199323	ST.STEEL RETAINER RING A-12 UNI 7435
130	1186002	SUCTION GASKET FOR SCRAPER HOOKING
181	1199516	PIN FOR DENSITY ADJUSTMENT
182	1199311	SPRING GUIDE FOR ADJUSTMENT SYSTEM
183	1250701	SPRING FOR DENSITY ADJUSTMENT
201	1199322	EVAPORATOR GASKET ø 170 mm
202	1199547	TANK 8 L
205	1199544	BLUE LID
205	1199545	TRANSPARENT LID UL
280	1199534	TAP HANDLE
280	1357025	BLACK TAP CONTROL LEVER
281	1199339	TAP SPRING
282	1199505	TAP BODY
283	1199350	SPINDLE FOR TAP LEVER
283	1357026	DELIVERY TAP CLASP
284	1186000	O-RING 0123 RED SILICONE
286	1199342	TAP CAP
334	1199514	CLIP FOR TANK HOOKING
390	1313300	SUPPORTING FOOT H=40 mm
440	1240106	MOTOR FAN 25W 230V 50/60Hz
457	1120602	SOLENOID VALVE CEME 5935 3-WAY
547	1120602	SOLENOID VALVE CEME 5935 3-WAY
709	1319702	ON-OFF-ON SELECTOR SWITCH
711	1319202	GREEN TWO-POLE SWITCH 16A 250V
720	1199309	MICROSWITCH 5A 250V
775	1120362	COIL PARKER WB4.5 6W 220/230V 50/60Hz
775	1199316	COIL CEME B4 230V 50 Hz
780	1240201	GEAR MOTOR KENTA K9357505B
780	1240301	GEARMOTOR ELCO FR10-40-33 216

GRANITIME 1

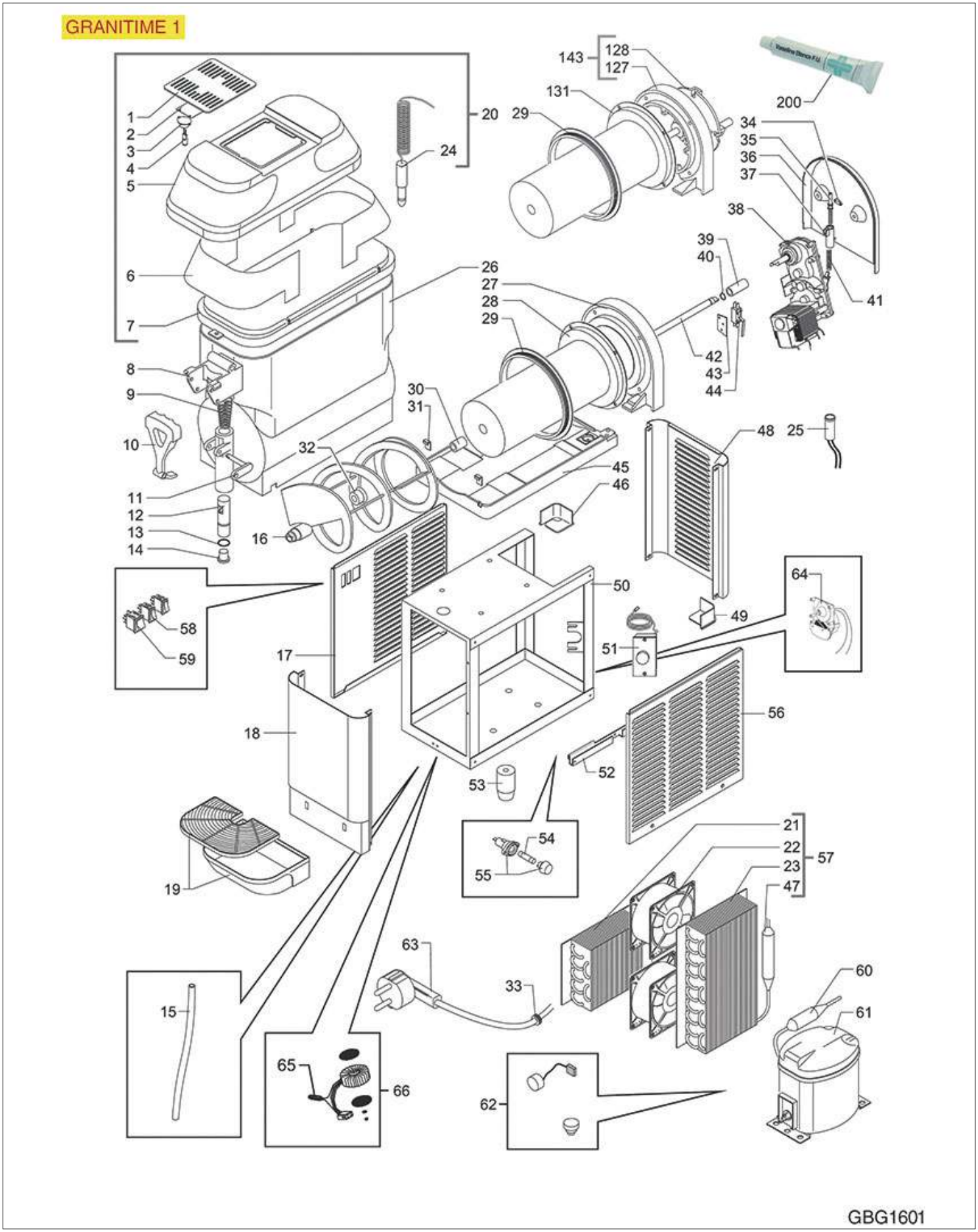

Positions without LF code no.: upon request

GBG

Position	LF code no.	Description
4	3221250	NEUTRAL HALOGEN LAMP G4 10W 12V
6	1199500	TRANSPARENT LABEL GRANITA MACH.GRANITIME
7	1199501	TRANSPARENT UNDERLID
8	1199502	TAP SUPPORT
9	1250700	SPRING FOR TAP
10	1199503	DARK BLUE LEVER TAP
10	1199534	TAP HANDLE
10	1357025	BLACK TAP CONTROL LEVER
11	1199504	TAP SPINDLE
12	1199505	TAP BODY
13	1186000	O-RING 0123 RED SILICONE
14	1199342	TAP CAP
15	1199507	PIPE FOR CONDENSATE OUTLET
16	1199508	SCROLL GRANITA MACHINE
19	1199509	COMPLETE DRIP TRAY - DARK BLUE
20	1199510	COMPLETE LID - DARK BLUE
22	3240501	AXIAL VENTILATOR SUNON 120x120x38 mm
26	1199512	TANK WITH UL LOCKING SYSTEM 12 l
29	1199322	EVAPORATOR GASKET ø 170 mm
31	1199514	CLIP FOR TANK HOOKING
32	1186002	SUCTION GASKET FOR SCRAPER HOOKING
34	1199515	RETAINER FOR DENSITY ADJUSTMENT
35	1199516	PIN FOR DENSITY ADJUSTMENT
37	1199311	SPRING GUIDE FOR ADJUSTMENT SYSTEM
38	1240201	GEAR MOTOR KENTA K9357505B
38	1240301	GEARMOTOR ELCO FR10-40-33 216
39	1199518	SHAFT COUPLING WITH BUSHING
40	1199323	ST.STEEL RETAINER RING A-12 UNI 7435
41	1250701	SPRING FOR DENSITY ADJUSTMENT
42	1199518	SHAFT COUPLING WITH BUSHING
43	1199520	RETAINER FOR GEAR MOTOR
44	1199309	MICROSWITCH 5A 250V
51	1444107	THERMOSTAT RANCO K50 L3231
53	1313300	SUPPORTING FOOT H=40 mm
53	1313301	SUPPORTING FOOT H=100 mm UL
58	3319468	BLACK SINGLE POLE SWITCH 16A 250V
59	1319202	GREEN TWO-POLE SWITCH 16A 250V
64	1446500	TIMER BIGATTI D94
200	1180000	VASELINE WHITE 30 g

GRANITIME 2

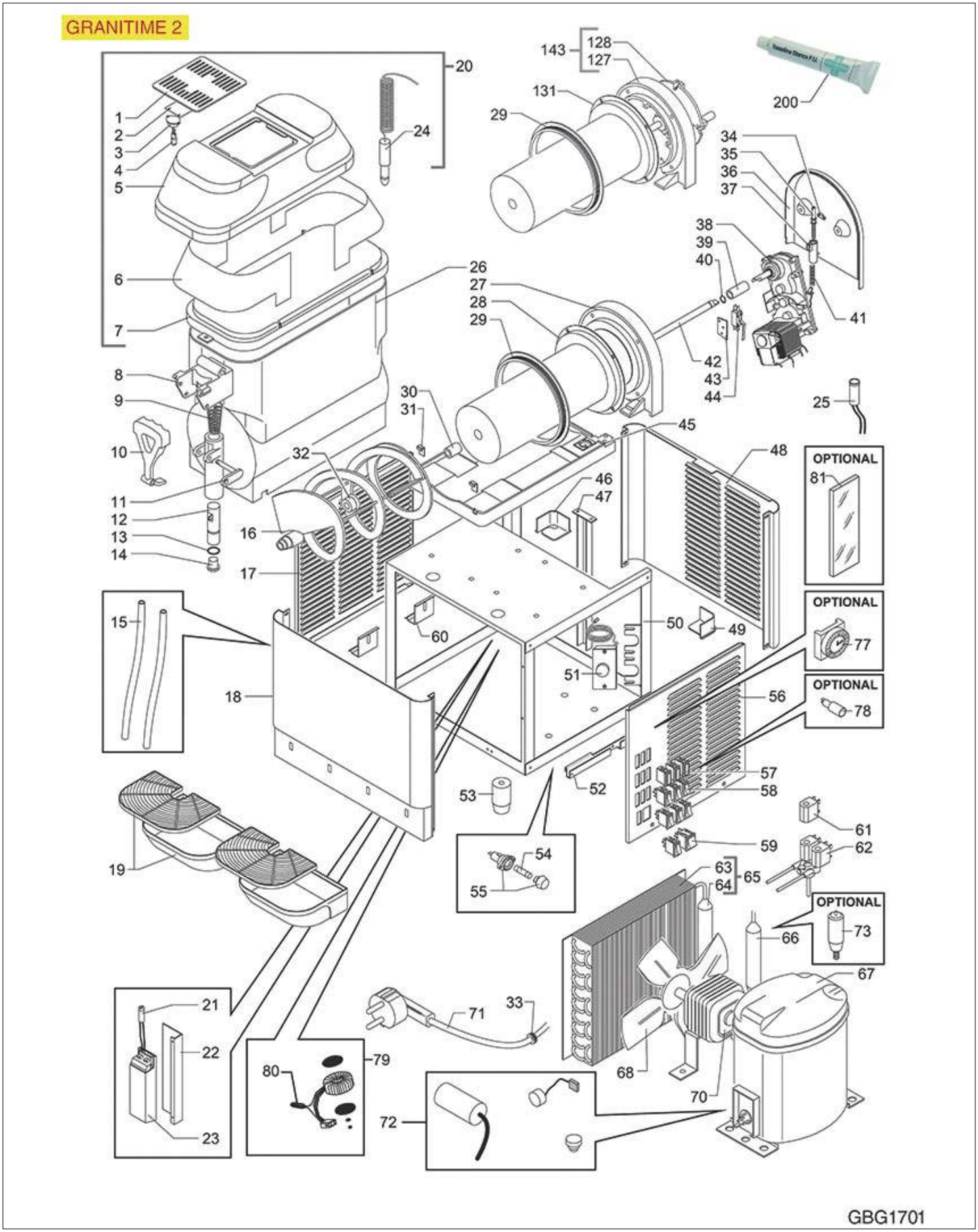

Positions without LF code no.: upon request

GBG

Position	LF code no.	Description
4	3221250	NEUTRAL HALOGEN LAMP G4 10W 12V
6	1199500	TRANSPARENT LABEL GRANITA MACH.GRANITIME
7	1199501	TRANSPARENT UNDERLID
8	1199502	TAP SUPPORT
9	1250700	SPRING FOR TAP
10	1199503	DARK BLUE LEVER TAP
10	1199534	TAP HANDLE
10	1357025	BLACK TAP CONTROL LEVER
11	1199504	TAP SPINDLE
12	1199505	TAP BODY
13	1186000	O-RING 0123 RED SILICONE
14	1199342	TAP CAP
15	1199507	PIPE FOR CONDENSATE OUTLET
16	1199508	SCROLL GRANITA MACHINE
19	1199509	COMPLETE DRIP TRAY - DARK BLUE
20	1199510	COMPLETE LID - DARK BLUE
26	1199512	TANK WITH UL LOCKING SYSTEM 12 l
29	1199322	EVAPORATOR GASKET ø 170 mm
31	1199514	CLIP FOR TANK HOOKING
32	1186002	SUCTION GASKET FOR SCRAPER HOOKING
34	1199515	RETAINER FOR DENSITY ADJUSTMENT
35	1199516	PIN FOR DENSITY ADJUSTMENT
37	1199311	SPRING GUIDE FOR ADJUSTMENT SYSTEM
38	1240201	GEAR MOTOR KENTA K9357505B
38	1240301	GEARMOTOR ELCO FR10-40-33 216
39	1199518	SHAFT COUPLING WITH BUSHING
40	1199323	ST.STEEL RETAINER RING A-12 UNI 7435
41	1250701	SPRING FOR DENSITY ADJUSTMENT
42	1199518	SHAFT COUPLING WITH BUSHING
43	1199520	RETAINER FOR GEAR MOTOR
44	1199309	MICROSWITCH 5A 250V
51	1444107	THERMOSTAT RANCO K50 L3231
53	1313300	SUPPORTING FOOT H=40 mm
53	1313301	SUPPORTING FOOT H=100 mm UL
58	3319468	BLACK SINGLE POLE SWITCH 16A 250V
59	1319202	GREEN TWO-POLE SWITCH 16A 250V
61	1120362	COIL PARKER WB4.5 6W 220/230V 50/60Hz
61	1199316	COIL CEME B4 230V 50 Hz
62	1120253	2-WAY SOLENOID VALVE CEME
68	3240964	SUCTION BLADE ø 250 mm 28°
70	1240104	MOTOR FAN 16W 230V 50/60Hz
200	1180000	VASELINE WHITE 30 g

GRANITIME 3

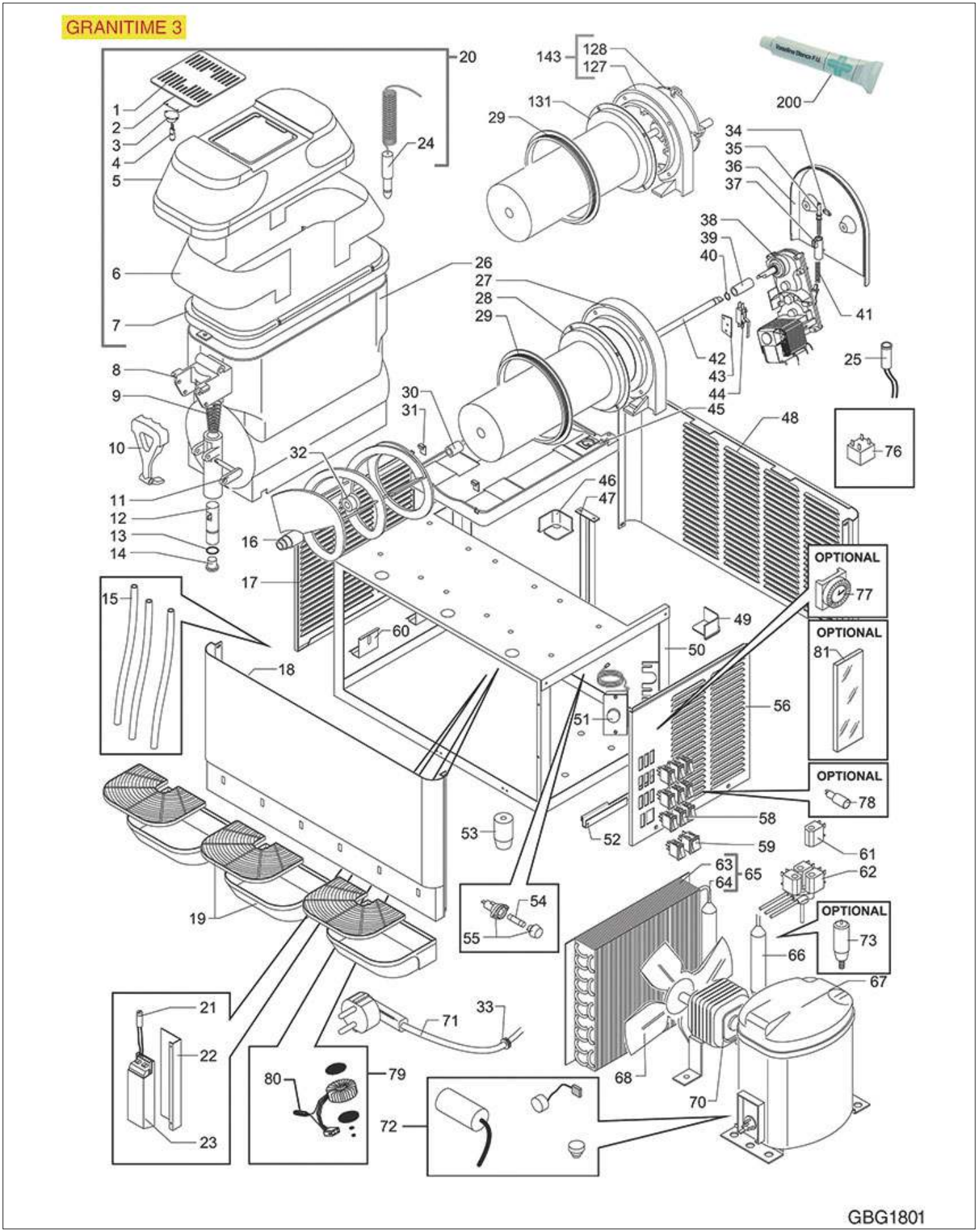

Positions without LF code no.: upon request

GBG

Position	LF code no.	Description
4	3221250	NEUTRAL HALOGEN LAMP G4 10W 12V
6	1199500	TRANSPARENT LABEL GRANITA MACH.GRANITIME
7	1199501	TRANSPARENT UNDERLID
8	1199502	TAP SUPPORT
9	1250700	SPRING FOR TAP
10	1199503	DARK BLUE LEVER TAP
10	1199534	TAP HANDLE
10	1357025	BLACK TAP CONTROL LEVER
11	1199504	TAP SPINDLE
12	1199505	TAP BODY
13	1186000	O-RING 0123 RED SILICONE
14	1199342	TAP CAP
15	1199507	PIPE FOR CONDENSATE OUTLET
16	1199508	SCROLL GRANITA MACHINE
19	1199509	COMPLETE DRIP TRAY - DARK BLUE
20	1199510	COMPLETE LID - DARK BLUE
22	3240501	AXIAL VENTILATOR SUNON 120x120x38 mm
26	1199512	TANK WITH UL LOCKING SYSTEM 12 l
29	1199322	EVAPORATOR GASKET ø 170 mm
31	1199514	CLIP FOR TANK HOOKING
32	1186002	SUCTION GASKET FOR SCRAPER HOOKING
34	1199515	RETAINER FOR DENSITY ADJUSTMENT
35	1199516	PIN FOR DENSITY ADJUSTMENT
37	1199311	SPRING GUIDE FOR ADJUSTMENT SYSTEM
38	1240201	GEAR MOTOR KENTA K9357505B
38	1240301	GEARMOTOR ELCO FR10-40-33 216
39	1199518	SHAFT COUPLING WITH BUSHING
40	1199323	ST.STEEL RETAINER RING A-12 UNI 7435
41	1250701	SPRING FOR DENSITY ADJUSTMENT
42	1199518	SHAFT COUPLING WITH BUSHING
43	1199520	RETAINER FOR GEAR MOTOR
44	1199309	MICROSWITCH 5A 250V
51	1444107	THERMOSTAT RANCO K50 L3231
53	1313300	SUPPORTING FOOT H=40 mm
58	3319468	BLACK SINGLE POLE SWITCH 16A 250V
59	1319202	GREEN TWO-POLE SWITCH 16A 250V
62	1120602	SOLENOID VALVE CEME 5935 3-WAY
64	1446500	TIMER BIGATTI D94
68	3240964	SUCTION BLADE ø 250 mm 28°
70	1240106	MOTOR FAN 25W 230V 50/60Hz
200	1180000	VASELINE WHITE 30 g

GRANITIME 3

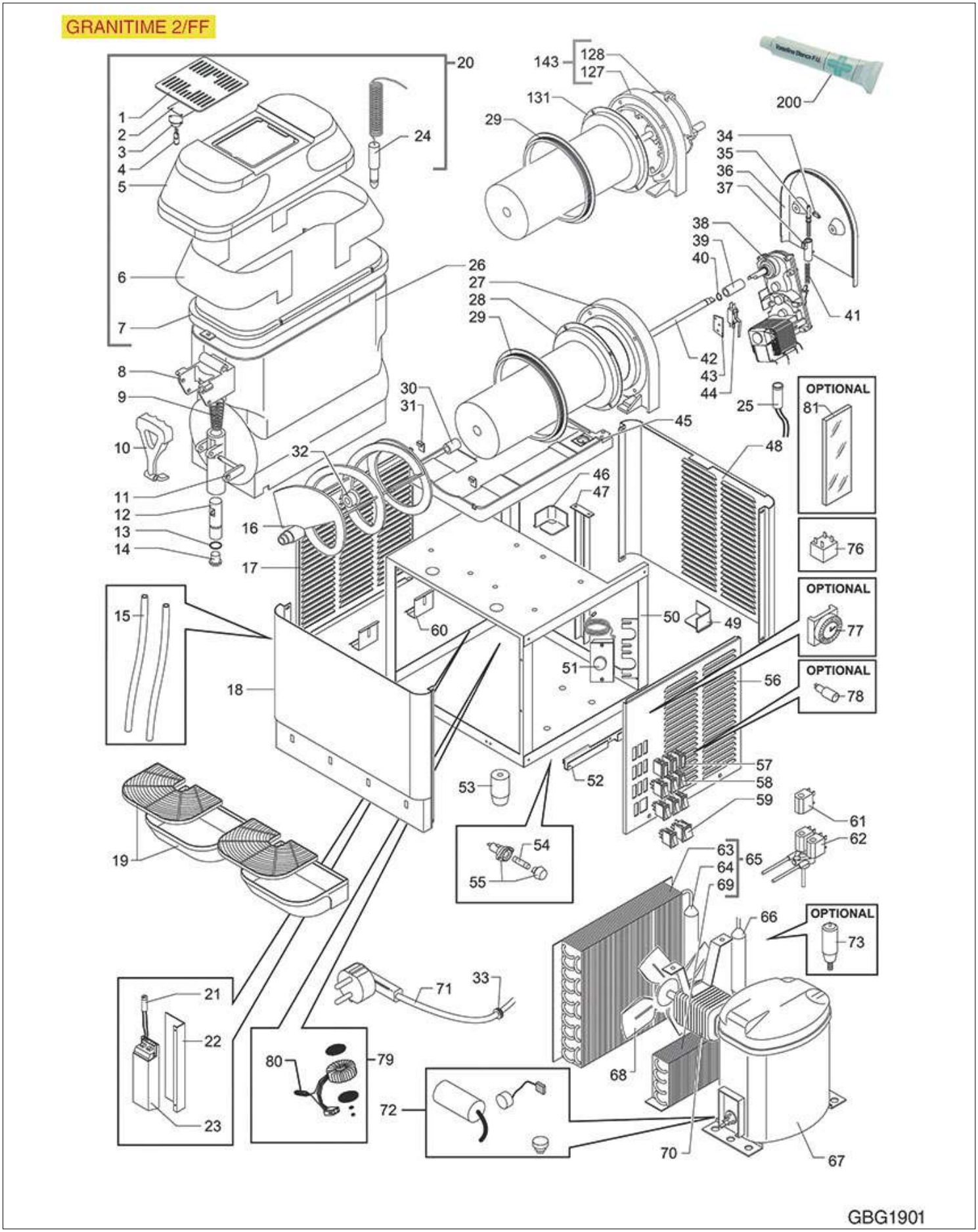

Positions without LF code no.: upon request

GBG

Position	LF code no.	Description
4	3221250	NEUTRAL HALOGEN LAMP G4 10W 12V
6	1199500	TRANSPARENT LABEL GRANITA MACH.GRANITIME
7	1199501	TRANSPARENT UNDERLID
8	1199502	TAP SUPPORT
9	1250700	SPRING FOR TAP
10	1199503	DARK BLUE LEVER TAP
10	1199534	TAP HANDLE
10	1357025	BLACK TAP CONTROL LEVER
11	1199504	TAP SPINDLE
12	1199505	TAP BODY
13	1186000	O-RING 0123 RED SILICONE
14	1199342	TAP CAP
15	1199507	PIPE FOR CONDENSATE OUTLET
16	1199508	SCROLL GRANITA MACHINE
19	1199509	COMPLETE DRIP TRAY - DARK BLUE
20	1199510	COMPLETE LID - DARK BLUE
26	1199512	TANK WITH UL LOCKING SYSTEM 12 l
29	1199322	EVAPORATOR GASKET ø 170 mm
31	1199514	CLIP FOR TANK HOOKING
32	1186002	SUCTION GASKET FOR SCRAPER HOOKING
34	1199515	RETAINER FOR DENSITY ADJUSTMENT
35	1199516	PIN FOR DENSITY ADJUSTMENT
37	1199311	SPRING GUIDE FOR ADJUSTMENT SYSTEM
38	1240201	GEAR MOTOR KENTA K9357505B
38	1240301	GEARMOTOR ELCO FR10-40-33 216
39	1199518	SHAFT COUPLING WITH BUSHING
40	1199323	ST.STEEL RETAINER RING A-12 UNI 7435
41	1250701	SPRING FOR DENSITY ADJUSTMENT
42	1199518	SHAFT COUPLING WITH BUSHING
43	1199520	RETAINER FOR GEAR MOTOR
44	1199309	MICROSWITCH 5A 250V
51	1444107	THERMOSTAT RANCO K50 L3231
53	1313300	SUPPORTING FOOT H=40 mm
53	1313301	SUPPORTING FOOT H=100 mm UL
58	3319468	BLACK SINGLE POLE SWITCH 16A 250V
59	1319202	GREEN TWO-POLE SWITCH 16A 250V
61	1120362	COIL PARKER WB4.5 6W 220/230V 50/60Hz
61	1199316	COIL CEME B4 230V 50 Hz
62	1120253	2-WAY SOLENOID VALVE CEME
68	3240964	SUCTION BLADE ø 250 mm 28°
200	1180000	VASELINE WHITE 30 g

GRANITIME 3/FF

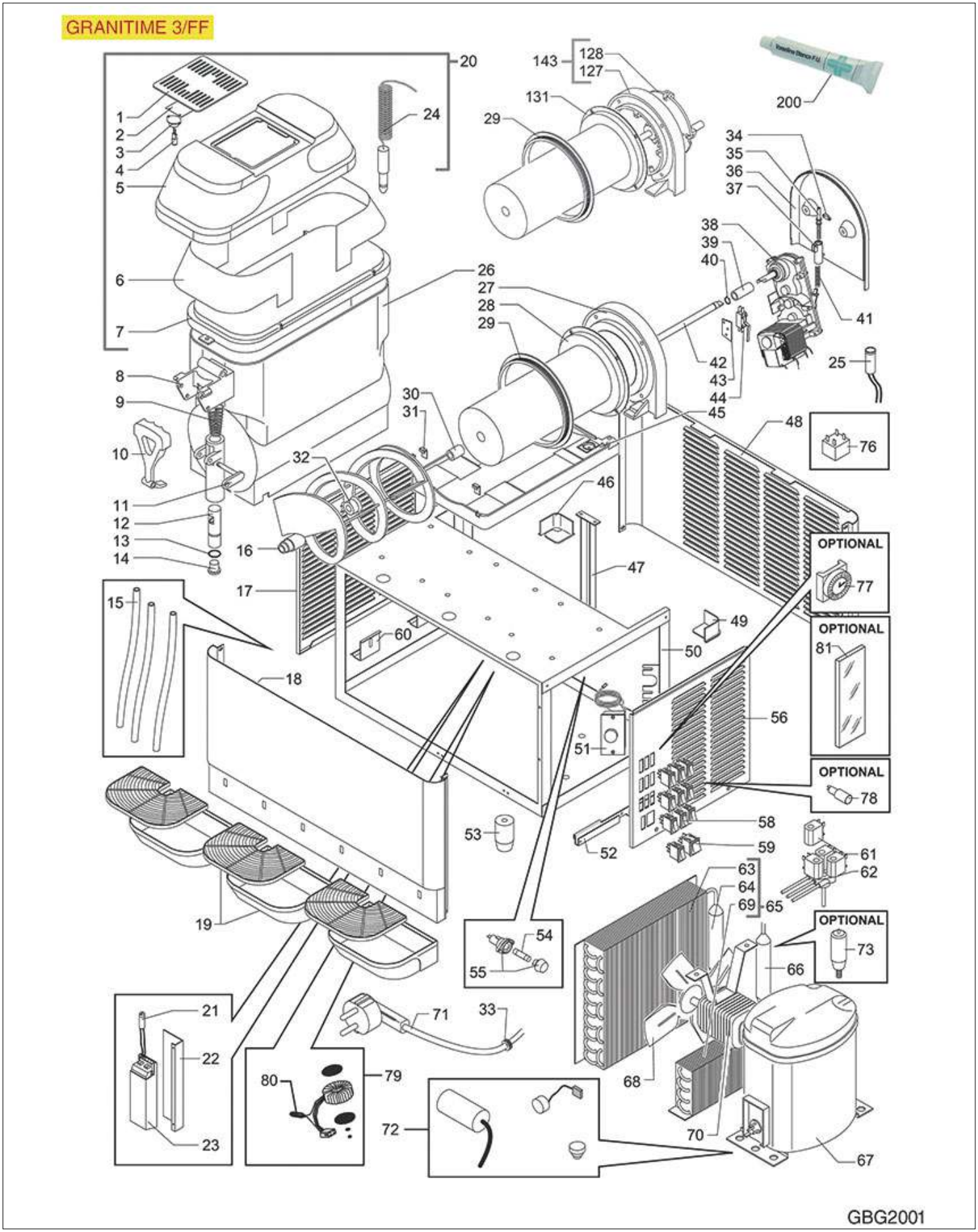

Positions without LF code no.: upon request

GBG

Position	LF code no.	Description
4	3221250	NEUTRAL HALOGEN LAMP G4 10W 12V
6	1199500	TRANSPARENT LABEL GRANITA MACH.GRANITIME
7	1199501	TRANSPARENT UNDERLID
8	1199502	TAP SUPPORT
9	1250700	SPRING FOR TAP
10	1199503	DARK BLUE LEVER TAP
10	1199534	TAP HANDLE
10	1357025	BLACK TAP CONTROL LEVER
11	1199504	TAP SPINDLE
12	1199505	TAP BODY
13	1186000	O-RING 0123 RED SILICONE
14	1199342	TAP CAP
15	1199507	PIPE FOR CONDENSATE OUTLET
16	1199508	SCROLL GRANITA MACHINE
19	1199509	COMPLETE DRIP TRAY - DARK BLUE
20	1199510	COMPLETE LID - DARK BLUE
22	3240501	AXIAL VENTILATOR SUNON 120x120x38 mm
26	1199512	TANK WITH UL LOCKING SYSTEM 12 l
29	1199322	EVAPORATOR GASKET ø 170 mm
31	1199514	CLIP FOR TANK HOOKING
32	1186002	SUCTION GASKET FOR SCRAPER HOOKING
34	1199515	RETAINER FOR DENSITY ADJUSTMENT
35	1199516	PIN FOR DENSITY ADJUSTMENT
37	1199311	SPRING GUIDE FOR ADJUSTMENT SYSTEM
38	1240201	GEAR MOTOR KENTA K9357505B
38	1240301	GEARMOTOR ELCO FR10-40-33 216
39	1199518	SHAFT COUPLING WITH BUSHING
40	1199323	ST.STEEL RETAINER RING A-12 UNI 7435
41	1250701	SPRING FOR DENSITY ADJUSTMENT
42	1199518	SHAFT COUPLING WITH BUSHING
43	1199520	RETAINER FOR GEAR MOTOR
44	1199309	MICROSWITCH 5A 250V
51	1444107	THERMOSTAT RANCO K50 L3231
53	1313300	SUPPORTING FOOT H=40 mm
58	3319468	BLACK SINGLE POLE SWITCH 16A 250V
59	1319202	GREEN TWO-POLE SWITCH 16A 250V
62	1120602	SOLENOID VALVE CEME 5935 3-WAY
64	1446500	TIMER BIGATTI D94
200	1180000	VASELINE WHITE 30 g

GRANISHERBET 1

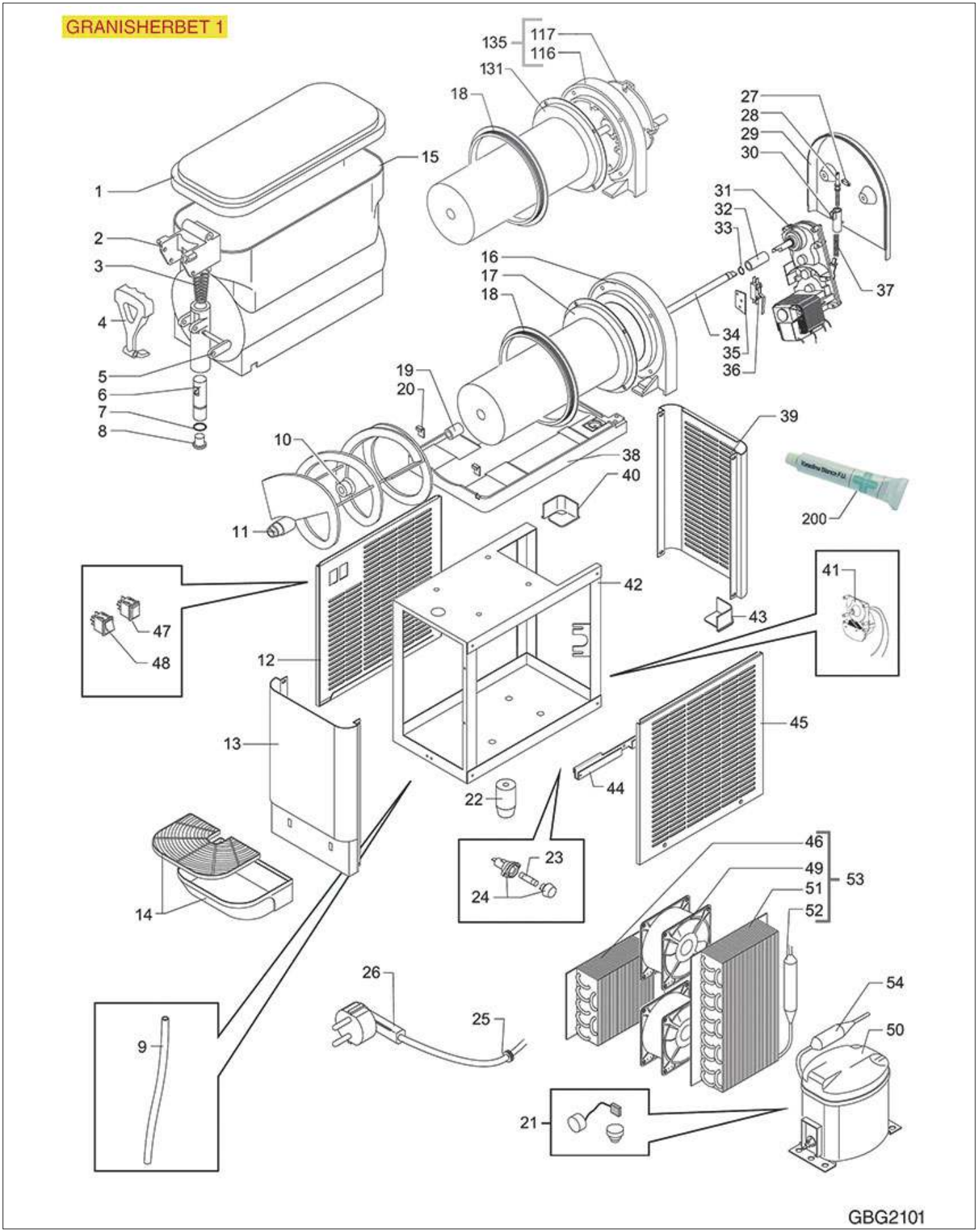

Positions without LF code no.: upon request

GBG

Position	LF code no.	Description
1	1199544	BLUE LID
1	1199545	TRANSPARENT LID UL
2	1199502	TAP SUPPORT
3	1250700	SPRING FOR TAP
5	1199504	TAP SPINDLE
6	1199505	TAP BODY
7	1186000	O-RING 0123 RED SILICONE
8	1199342	TAP CAP
9	1199507	PIPE FOR CONDENSATE OUTLET
10	1186002	SUCTION GASKET FOR SCRAPER HOOKING
11	1199508	SCROLL GRANITA MACHINE
14	1199546	COMPLETE DRIP TRAY BLUE
15	1199547	TANK 8 L
18	1199322	EVAPORATOR GASKET ø 170 mm
20	1199514	CLIP FOR TANK HOOKING
22	1313300	SUPPORTING FOOT H=40 mm
22	1313301	SUPPORTING FOOT H=100 mm UL
27	1199515	RETAINER FOR DENSITY ADJUSTMENT
28	1199516	PIN FOR DENSITY ADJUSTMENT
30	1199311	SPRING GUIDE FOR ADJUSTMENT SYSTEM
31	1240201	GEAR MOTOR KENTA K9357505B
31	1240301	GEARMOTOR ELCO FR10-40-33 216
32	1199518	SHAFT COUPLING WITH BUSHING
33	1199323	ST.STEEL RETAINER RING A-12 UNI 7435
34	1199518	SHAFT COUPLING WITH BUSHING
35	1199520	RETAINER FOR GEAR MOTOR
36	1199309	MICROSWITCH 5A 250V
37	1250701	SPRING FOR DENSITY ADJUSTMENT
41	1446500	TIMER BIGATTI D94
47	1319702	ON-OFF-ON SELECTOR SWITCH
48	1319202	GREEN TWO-POLE SWITCH 16A 250V
49	3240501	AXIAL VENTILATOR SUNON 120x120x38 mm
200	1180000	VASELINE WHITE 30 g

GRANISHERBET 2

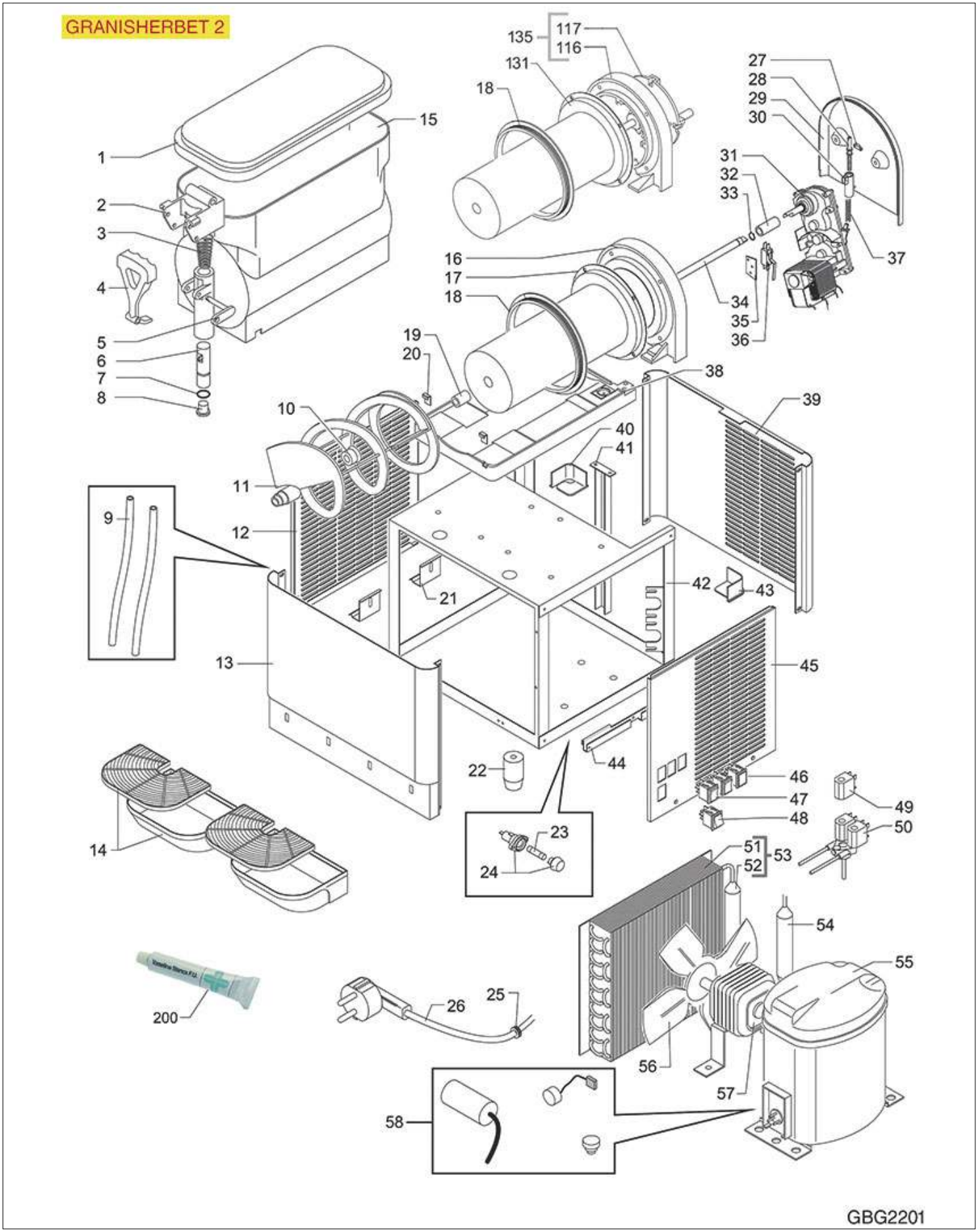

Positions without LF code no.: upon request

GBG

Position	LF code no.	Description
1	1199544	BLUE LID
1	1199545	TRANSPARENT LID UL
2	1199502	TAP SUPPORT
3	1250700	SPRING FOR TAP
5	1199504	TAP SPINDLE
6	1199505	TAP BODY
7	1186000	O-RING 0123 RED SILICONE
8	1199342	TAP CAP
9	1199507	PIPE FOR CONDENSATE OUTLET
10	1186002	SUCTION GASKET FOR SCRAPER HOOKING
11	1199508	SCROLL GRANITA MACHINE
14	1199546	COMPLETE DRIP TRAY BLUE
15	1199547	TANK 8 L
18	1199322	EVAPORATOR GASKET ø 170 mm
20	1199514	CLIP FOR TANK HOOKING
22	1313300	SUPPORTING FOOT H=40 mm
22	1313301	SUPPORTING FOOT H=100 mm UL
27	1199515	RETAINER FOR DENSITY ADJUSTMENT
28	1199516	PIN FOR DENSITY ADJUSTMENT
30	1199311	SPRING GUIDE FOR ADJUSTMENT SYSTEM
31	1240201	GEAR MOTOR KENTA K9357505B
31	1240301	GEARMOTOR ELCO FR10-40-33 216
32	1199518	SHAFT COUPLING WITH BUSHING
33	1199323	ST.STEEL RETAINER RING A-12 UNI 7435
34	1199518	SHAFT COUPLING WITH BUSHING
35	1199520	RETAINER FOR GEAR MOTOR
36	1199309	MICROSWITCH 5A 250V
37	1250701	SPRING FOR DENSITY ADJUSTMENT
47	1319702	ON-OFF-ON SELECTOR SWITCH
48	1319202	GREEN TWO-POLE SWITCH 16A 250V
49	1120362	COIL PARKER WB4.5 6W 220/230V 50/60Hz
49	1199316	COIL CEME B4 230V 50 Hz
50	1120253	2-WAY SOLENOID VALVE CEME
56	3240964	SUCTION BLADE ø 250 mm 28°
57	1240104	MOTOR FAN 16W 230V 50/60Hz
200	1180000	VASELINE WHITE 30 g

GRANISHERBET 3

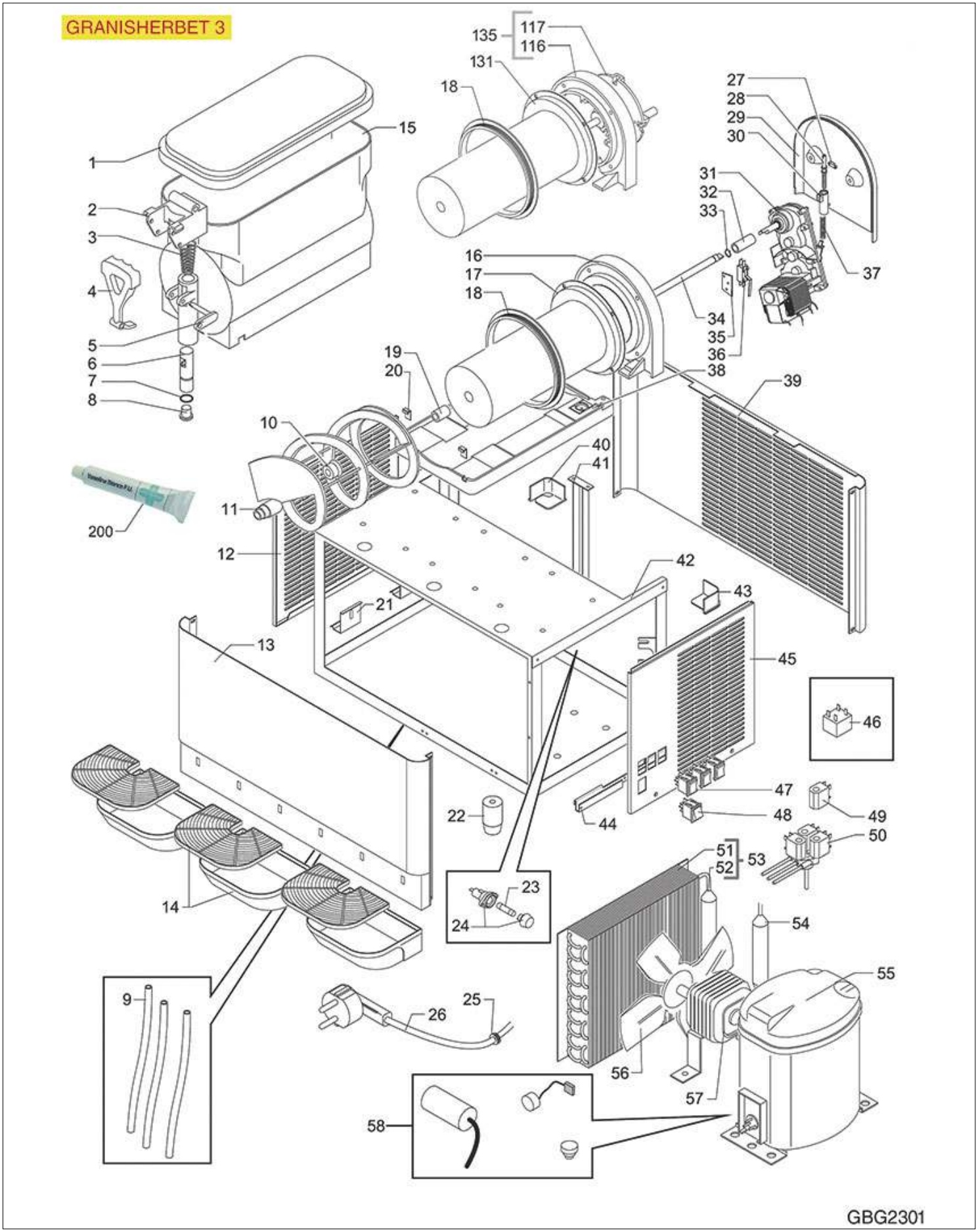

Positions without LF code no.: upon request

GBG

Position	LF code no.	Description
1	1199544	BLUE LID
1	1199545	TRANSPARENT LID UL
2	1199502	TAP SUPPORT
3	1250700	SPRING FOR TAP
5	1199504	TAP SPINDLE
6	1199505	TAP BODY
7	1186000	O-RING 0123 RED SILICONE
8	1199342	TAP CAP
9	1199507	PIPE FOR CONDENSATE OUTLET
10	1186002	SUCTION GASKET FOR SCRAPER HOOKING
11	1199508	SCROLL GRANITA MACHINE
14	1199546	COMPLETE DRIP TRAY BLUE
15	1199547	TANK 8 L
18	1199322	EVAPORATOR GASKET ø 170 mm
20	1199514	CLIP FOR TANK HOOKING
22	1313300	SUPPORTING FOOT H=40 mm
22	1313301	SUPPORTING FOOT H=100 mm UL
27	1199515	RETAINER FOR DENSITY ADJUSTMENT
28	1199516	PIN FOR DENSITY ADJUSTMENT
30	1199311	SPRING GUIDE FOR ADJUSTMENT SYSTEM
31	1240201	GEAR MOTOR KENTA K9357505B
31	1240301	GEARMOTOR ELCO FR10-40-33 216
32	1199518	SHAFT COUPLING WITH BUSHING
33	1199323	ST.STEEL RETAINER RING A-12 UNI 7435
34	1199518	SHAFT COUPLING WITH BUSHING
35	1199520	RETAINER FOR GEAR MOTOR
36	1199309	MICROSWITCH 5A 250V
37	1250701	SPRING FOR DENSITY ADJUSTMENT
47	1319702	ON-OFF-ON SELECTOR SWITCH
48	1319202	GREEN TWO-POLE SWITCH 16A 250V
49	1120362	COIL PARKER WB4.5 6W 220/230V 50/60Hz
49	1199316	COIL CEME B4 230V 50 Hz
50	1120602	SOLENOID VALVE CEME 5935 3-WAY
56	3240964	SUCTION BLADE ø 250 mm 28°
57	1240106	MOTOR FAN 25W 230V 50/60Hz
200	1180000	VASELINE WHITE 30 g

GRANIMIX GM4

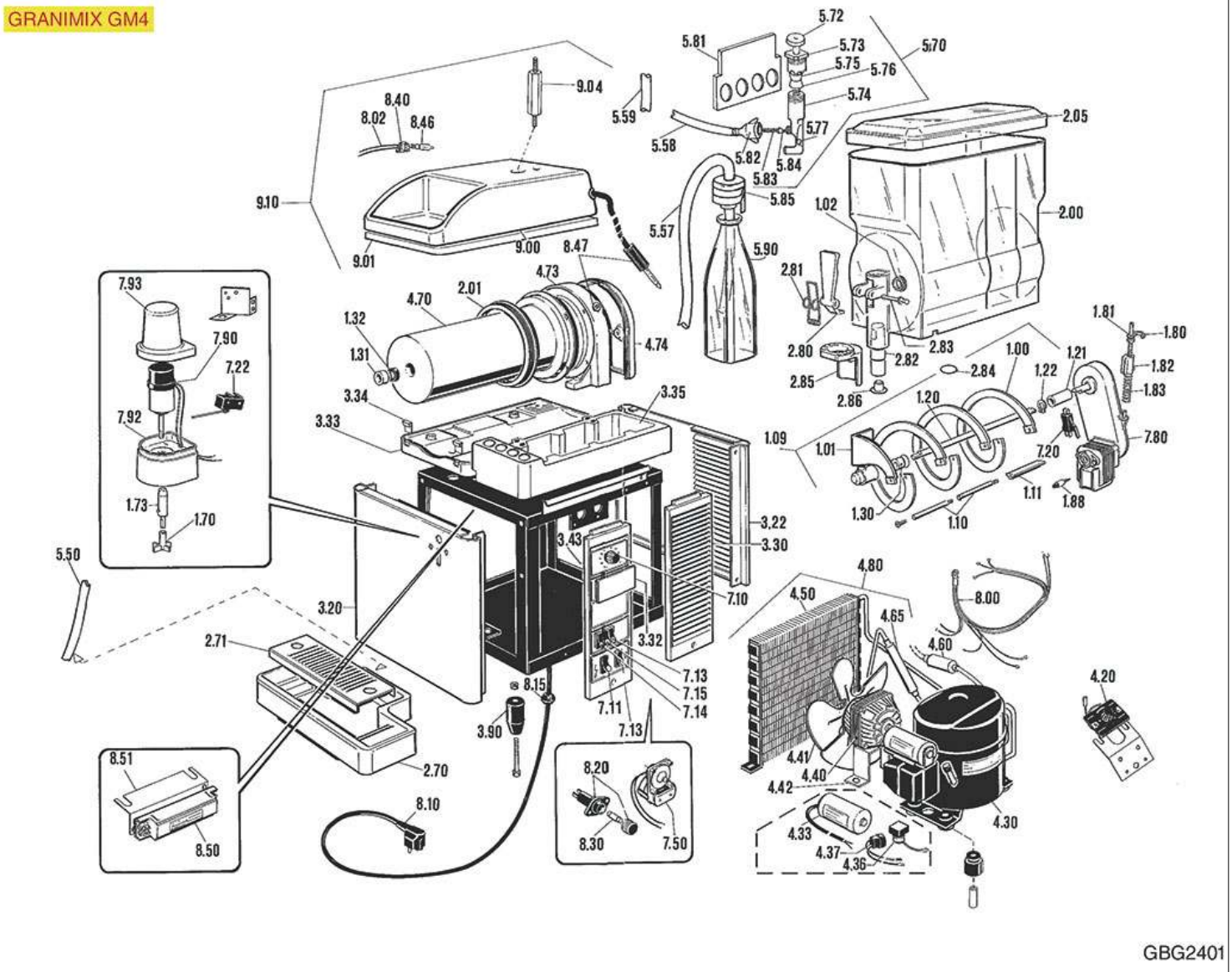

Positions without LF code no.: upon request

GBG

Position	LF code no.	Description
109	1199508	SCROLL GRANITA MACHINE
120	1199518	SHAFT COUPLING WITH BUSHING
121	1199518	SHAFT COUPLING WITH BUSHING
122	1199323	ST.STEEL RETAINER RING A-12 UNI 7435
130	1186002	SUCTION GASKET FOR SCRAPER HOOKING
131	1199335	EVAPORATOR BUSHING
132	1186539	SILICONE OIL SEAL UNIT
170	1199521	STIRRING WHEEL
180	1199515	RETAINER FOR DENSITY ADJUSTMENT
181	1199516	PIN FOR DENSITY ADJUSTMENT
182	1199311	SPRING GUIDE FOR ADJUSTMENT SYSTEM
183	1250701	SPRING FOR DENSITY ADJUSTMENT
200	1199512	TANK WITH UL LOCKING SYSTEM 12 l
201	1199322	EVAPORATOR GASKET ø 170 mm
205	1199501	TRANSPARENT UNDERLID
270	1199528	DRIP TRAY MS/4-GM/4
271	1199531	DRIP TRAY GRID MS/4-GM/4
280	1199534	TAP HANDLE
281	1199339	TAP SPRING
282	1199505	TAP BODY
283	1199350	SPINDLE FOR TAP LEVER
284	1186000	O-RING 0123 RED SILICONE
286	1199342	TAP CAP
330	1199119	GRANITA MACHINE SIDE 310x106 mm
334	1199514	CLIP FOR TANK HOOKING
390	1313301	SUPPORTING FOOT H=100 mm UL
420	1444107	THERMOSTAT RANCO K50 L3231
558	3090234	PVC HOSE ø 5x8 mm - 100 m
558	3090734	PVC HOSE ø 5x8 mm - 10 m
570	1199541	COMPLETE PUMP
590	1199543	GLASS BOTTLE FOR GRANIMIX
711	1319202	GREEN TWO-POLE SWITCH 16A 250V
711	1319203	GREEN MONOPOLAR SWITCH 16A 250V
713	1319204	ORANGE MONOPOLAR SWITCH 16A 250V
714	1319203	GREEN MONOPOLAR SWITCH 16A 250V
715	1319205	BLUE MONOPOLAR SWITCH 16A 250V
720	1199309	MICROSWITCH 5A 250V
750	1446500	TIMER BIGATTI D94
780	1240201	GEAR MOTOR KENTA K9357505B
780	1240301	GEARMOTOR ELCO FR10-40-33 216
790	1240109	BLENDER MOTOR K50305 230V 50Hz
846	3221250	NEUTRAL HALOGEN LAMP G4 10W 12V
901	1199545	TRANSPARENT LID UL

GRANIMIX GM8

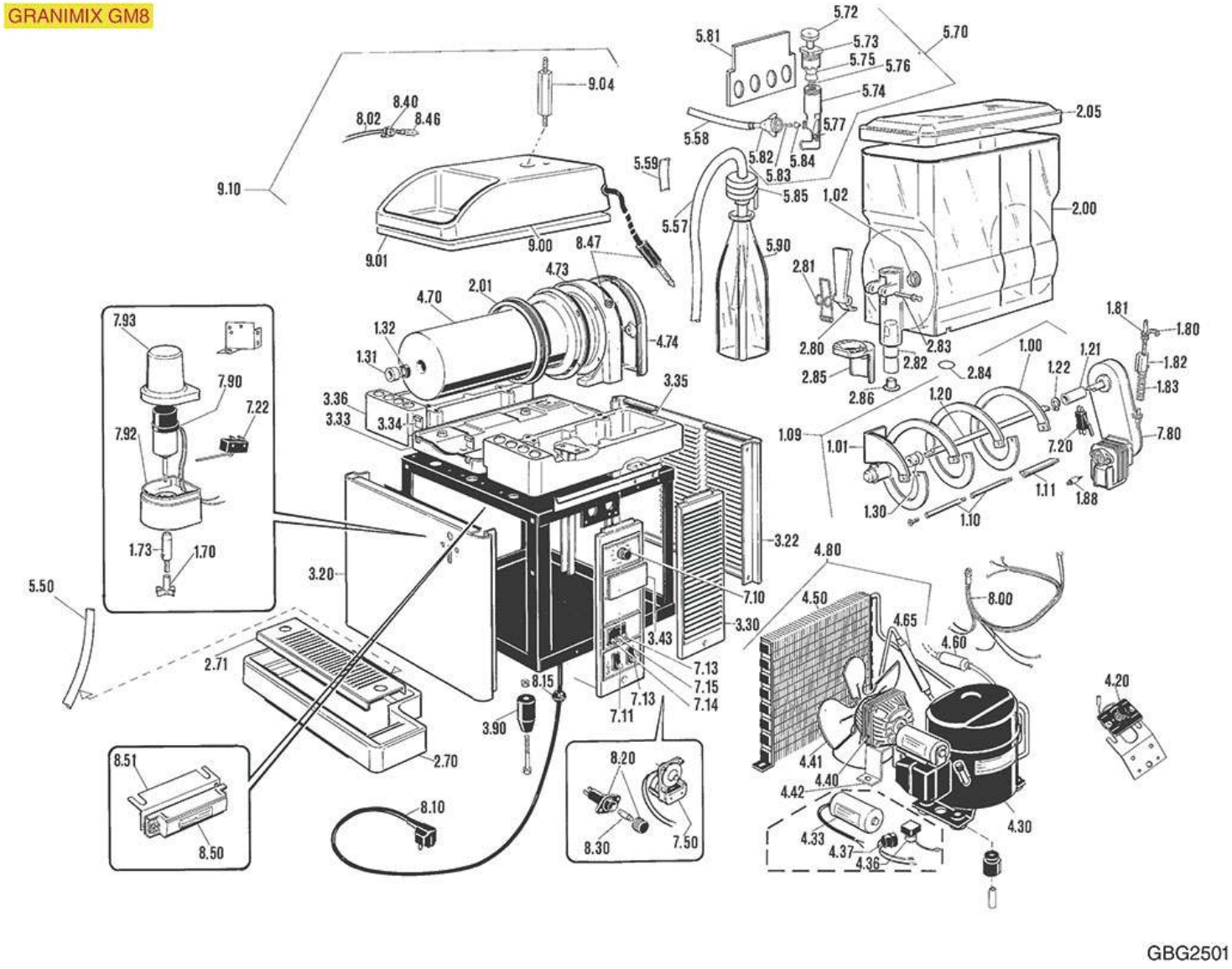

Positions without LF code no.: upon request

GBG

Position	LF code no.	Description
109	1199508	SCROLL GRANITA MACHINE
120	1199518	SHAFT COUPLING WITH BUSHING
121	1199518	SHAFT COUPLING WITH BUSHING
122	1199323	ST.STEEL RETAINER RING A-12 UNI 7435
130	1186002	SUCTION GASKET FOR SCRAPER HOOKING
131	1199335	EVAPORATOR BUSHING
132	1186539	SILICONE OIL SEAL UNIT
170	1199521	STIRRING WHEEL
180	1199515	RETAINER FOR DENSITY ADJUSTMENT
181	1199516	PIN FOR DENSITY ADJUSTMENT
182	1199311	SPRING GUIDE FOR ADJUSTMENT SYSTEM
183	1250701	SPRING FOR DENSITY ADJUSTMENT
200	1199512	TANK WITH UL LOCKING SYSTEM 12 l
201	1199322	EVAPORATOR GASKET ø 170 mm
205	1199501	TRANSPARENT UNDERLID
270	1199529	DRIP TRAY MS/8-GM/8
271	1199532	DRIP TRAY GRID MS/8-GM/8
280	1199534	TAP HANDLE
281	1199339	TAP SPRING
282	1199505	TAP BODY
283	1199350	SPINDLE FOR TAP LEVER
284	1186000	O-RING 0123 RED SILICONE
286	1199342	TAP CAP
330	1199119	GRANITA MACHINE SIDE 310x106 mm
334	1199514	CLIP FOR TANK HOOKING
390	1313301	SUPPORTING FOOT H=100 mm UL
420	1444107	THERMOSTAT RANCO K50 L3231
558	3090234	PVC HOSE ø 5x8 mm - 100 m
558	3090734	PVC HOSE ø 5x8 mm - 10 m
570	1199541	COMPLETE PUMP
590	1199543	GLASS BOTTLE FOR GRANIMIX
711	1319202	GREEN TWO-POLE SWITCH 16A 250V
711	1319203	GREEN MONOPOLAR SWITCH 16A 250V
713	1319204	ORANGE MONOPOLAR SWITCH 16A 250V
714	1319203	GREEN MONOPOLAR SWITCH 16A 250V
715	1319205	BLUE MONOPOLAR SWITCH 16A 250V
720	1199309	MICROSWITCH 5A 250V
750	1446500	TIMER BIGATTI D94
780	1240201	GEAR MOTOR KENTA K9357505B
780	1240301	GEARMOTOR ELCO FR10-40-33 216
790	1240109	BLENDER MOTOR K50305 230V 50Hz
846	3221250	NEUTRAL HALOGEN LAMP G4 10W 12V
901	1199545	TRANSPARENT LID UL

GRANIMIX GM8 2V

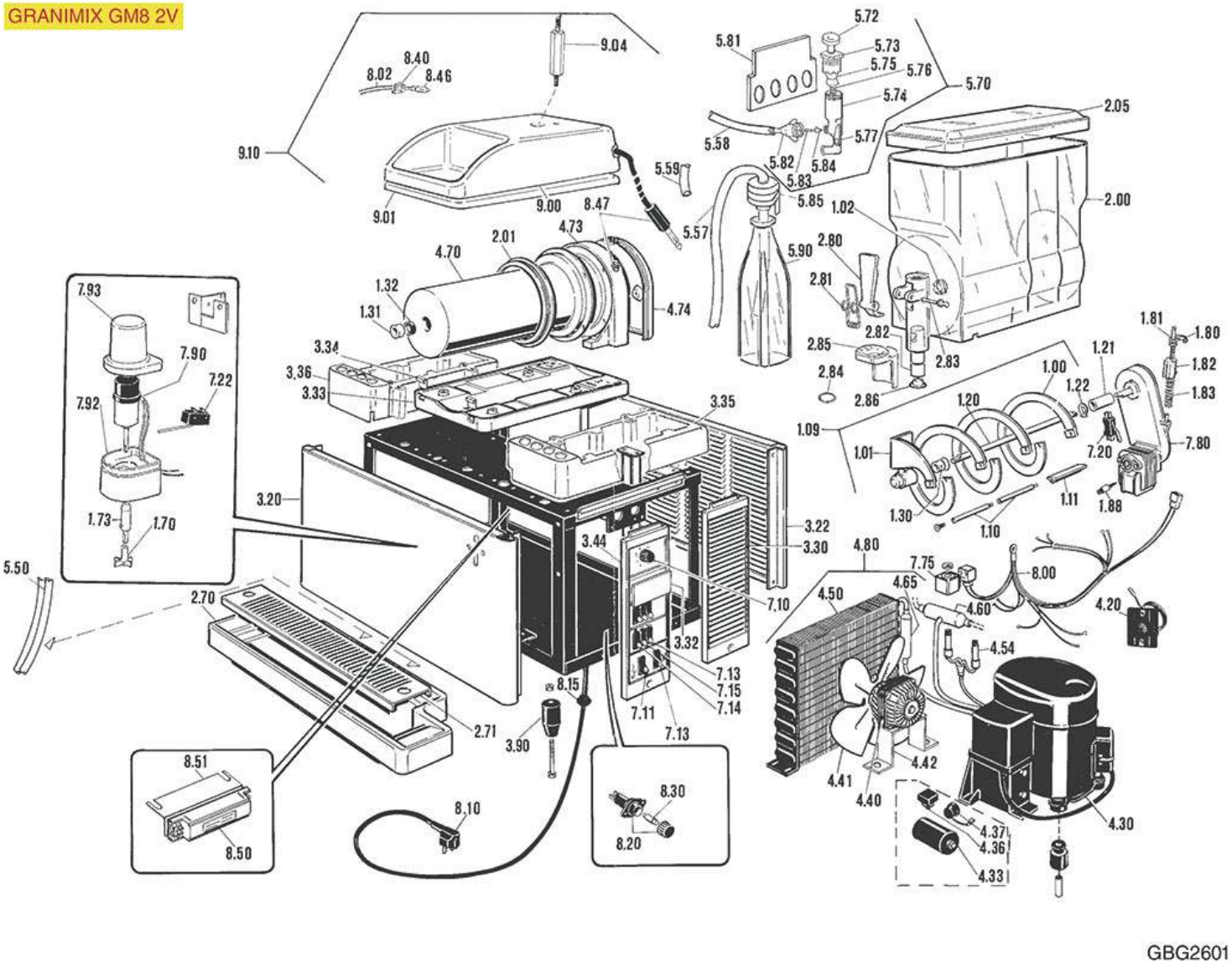

Positions without LF code no.: upon request

GBG

Position	LF code no.	Description
109	1199508	SCROLL GRANITA MACHINE
120	1199518	SHAFT COUPLING WITH BUSHING
121	1199518	SHAFT COUPLING WITH BUSHING
122	1199323	ST.STEEL RETAINER RING A-12 UNI 7435
130	1186002	SUCTION GASKET FOR SCRAPER HOOKING
131	1199335	EVAPORATOR BUSHING
132	1186539	SILICONE OIL SEAL UNIT
170	1199521	STIRRING WHEEL
180	1199515	RETAINER FOR DENSITY ADJUSTMENT
181	1199516	PIN FOR DENSITY ADJUSTMENT
182	1199311	SPRING GUIDE FOR ADJUSTMENT SYSTEM
183	1250701	SPRING FOR DENSITY ADJUSTMENT
200	1199512	TANK WITH UL LOCKING SYSTEM 12 l
201	1199322	EVAPORATOR GASKET ø 170 mm
205	1199501	TRANSPARENT UNDERLID
271	1199533	DRIP TRAY GRID GM8/2V
280	1199534	TAP HANDLE
281	1199339	TAP SPRING
282	1199505	TAP BODY
283	1199350	SPINDLE FOR TAP LEVER
284	1186000	O-RING 0123 RED SILICONE
286	1199342	TAP CAP
330	1199119	GRANITA MACHINE SIDE 310x106 mm
334	1199514	CLIP FOR TANK HOOKING
390	1313301	SUPPORTING FOOT H=100 mm UL
420	1444107	THERMOSTAT RANCO K50 L3231
440	1240104	MOTOR FAN 16W 230V 50/60Hz
441	3240964	SUCTION BLADE ø 250 mm 28°
558	3090234	PVC HOSE ø 5x8 mm - 100 m
558	3090734	PVC HOSE ø 5x8 mm - 10 m
570	1199541	COMPLETE PUMP
590	1199543	GLASS BOTTLE FOR GRANIMIX
711	1319202	GREEN TWO-POLE SWITCH 16A 250V
711	1319203	GREEN MONOPOLAR SWITCH 16A 250V
713	1319204	ORANGE MONOPOLAR SWITCH 16A 250V
714	1319203	GREEN MONOPOLAR SWITCH 16A 250V
715	1319205	BLUE MONOPOLAR SWITCH 16A 250V
720	1199309	MICROSWITCH 5A 250V
780	1240201	GEAR MOTOR KENTA K9357505B
780	1240301	GEARMOTOR ELCO FR10-40-33 216
790	1240109	BLENDER MOTOR K50305 230V 50Hz
846	3221250	NEUTRAL HALOGEN LAMP G4 10W 12V
901	1199545	TRANSPARENT LID UL

MULTISTAR MS4

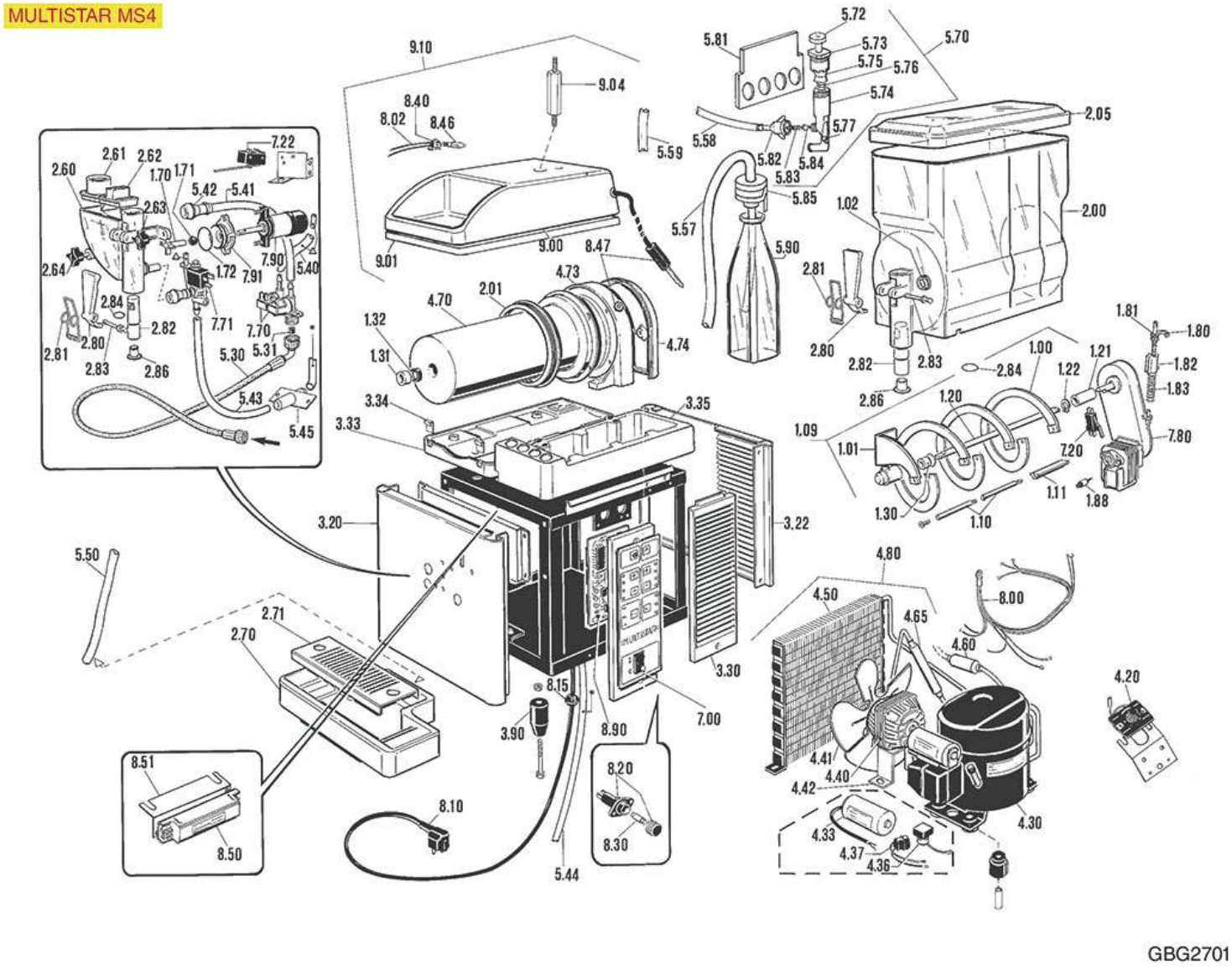

Positions without LF code no.: upon request

GBG

Position	LF code no.	Description
109	1199508	SCROLL GRANITA MACHINE
120	1199518	SHAFT COUPLING WITH BUSHING
121	1199518	SHAFT COUPLING WITH BUSHING
122	1199323	ST.STEEL RETAINER RING A-12 UNI 7435
130	1186002	SUCTION GASKET FOR SCRAPER HOOKING
131	1199335	EVAPORATOR BUSHING
132	1186539	SILICONE OIL SEAL UNIT
170	1199521	STIRRING WHEEL
172	1186003	FLANGE GASKET FOR FAN MOTOR
180	1199515	RETAINER FOR DENSITY ADJUSTMENT
181	1199516	PIN FOR DENSITY ADJUSTMENT
182	1199311	SPRING GUIDE FOR ADJUSTMENT SYSTEM
183	1250701	SPRING FOR DENSITY ADJUSTMENT
200	1199512	TANK WITH UL LOCKING SYSTEM 12 l
201	1199322	EVAPORATOR GASKET ø 170 mm
205	1199501	TRANSPARENT UNDERLID
260	1199523	MIXER TANK
270	1199528	DRIP TRAY MS/4-GM/4
271	1199531	DRIP TRAY GRID MS/4-GM/4
281	1199339	TAP SPRING
282	1199505	TAP BODY
283	1199350	SPINDLE FOR TAP LEVER
284	1186000	O-RING 0123 RED SILICONE
286	1199342	TAP CAP
330	1199119	GRANITA MACHINE SIDE 310x106 mm
334	1199514	CLIP FOR TANK HOOKING
390	1313301	SUPPORTING FOOT H=100 mm UL
420	1444107	THERMOSTAT RANCO K50 L3231
558	3090234	PVC HOSE ø 5x8 mm - 100 m
558	3090734	PVC HOSE ø 5x8 mm - 10 m
570	1199541	COMPLETE PUMP
590	1199543	GLASS BOTTLE FOR GRANIMIX
700	1319206	BLACK BIPOLAR SWITCH 16A 250V
720	1199309	MICROSWITCH 5A 250V
771	1120603	SOLENOID VALVE M&M 246DSQ0G
780	1240201	GEAR MOTOR KENTA K9357505B
780	1240301	GEARMOTOR ELCO FR10-40-33 216
790	1240109	BLENDER MOTOR K50305 230V 50Hz
791	1240110	FLANGE FOR BLENDER MOTOR
846	3221250	NEUTRAL HALOGEN LAMP G4 10W 12V
901	1199545	TRANSPARENT LID UL

MULTISTAR MS8

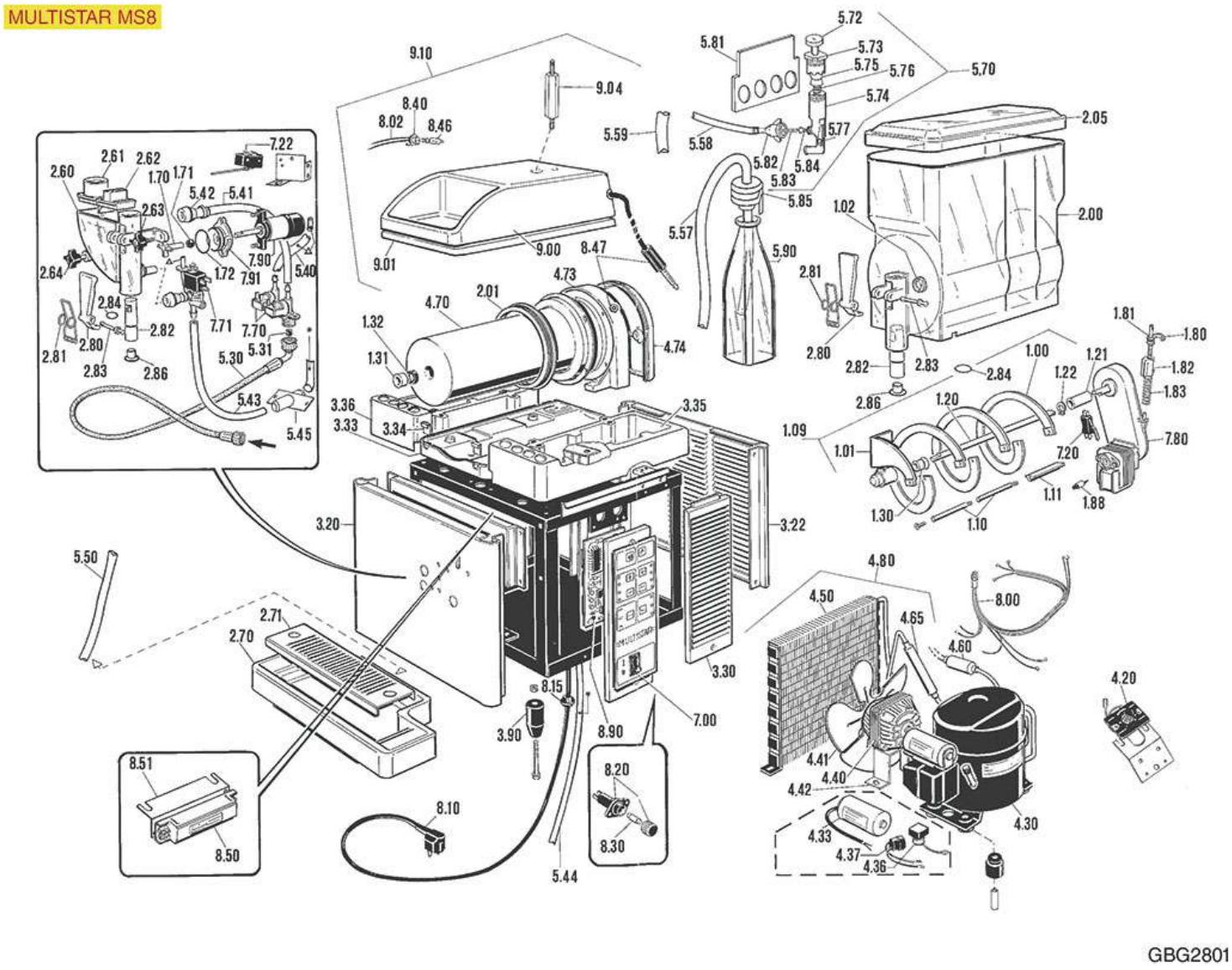

Positions without LF code no.: upon request

GBG

Position	LF code no.	Description
109	1199508	SCROLL GRANITA MACHINE
120	1199518	SHAFT COUPLING WITH BUSHING
121	1199518	SHAFT COUPLING WITH BUSHING
122	1199323	ST.STEEL RETAINER RING A-12 UNI 7435
130	1186002	SUCTION GASKET FOR SCRAPER HOOKING
131	1199335	EVAPORATOR BUSHING
132	1186539	SILICONE OIL SEAL UNIT
170	1199521	STIRRING WHEEL
172	1186003	FLANGE GASKET FOR FAN MOTOR
180	1199515	RETAINER FOR DENSITY ADJUSTMENT
181	1199516	PIN FOR DENSITY ADJUSTMENT
182	1199311	SPRING GUIDE FOR ADJUSTMENT SYSTEM
183	1250701	SPRING FOR DENSITY ADJUSTMENT
200	1199512	TANK WITH UL LOCKING SYSTEM 12 l
201	1199322	EVAPORATOR GASKET ø 170 mm
205	1199501	TRANSPARENT UNDERLID
260	1199523	MIXER TANK
270	1199529	DRIP TRAY MS/8-GM/8
271	1199532	DRIP TRAY GRID MS/8-GM/8
280	1199534	TAP HANDLE
281	1199339	TAP SPRING
282	1199505	TAP BODY
283	1199350	SPINDLE FOR TAP LEVER
284	1186000	O-RING 0123 RED SILICONE
286	1199342	TAP CAP
330	1199119	GRANITA MACHINE SIDE 310x106 mm
334	1199514	CLIP FOR TANK HOOKING
390	1313301	SUPPORTING FOOT H=100 mm UL
420	1444107	THERMOSTAT RANCO K50 L3231
558	3090234	PVC HOSE ø 5x8 mm - 100 m
558	3090734	PVC HOSE ø 5x8 mm - 10 m
570	1199541	COMPLETE PUMP
590	1199543	GLASS BOTTLE FOR GRANIMIX
700	1319206	BLACK BIPOLAR SWITCH 16A 250V
720	1199309	MICROSWITCH 5A 250V
771	1120603	SOLENOID VALVE M&M 246DSQ0G
780	1240201	GEAR MOTOR KENTA K9357505B
780	1240301	GEARMOTOR ELCO FR10-40-33 216
790	1240109	BLENDER MOTOR K50305 230V 50Hz
791	1240110	FLANGE FOR BLENDER MOTOR
846	3221250	NEUTRAL HALOGEN LAMP G4 10W 12V
901	1199545	TRANSPARENT LID UL

GRANISMART 1

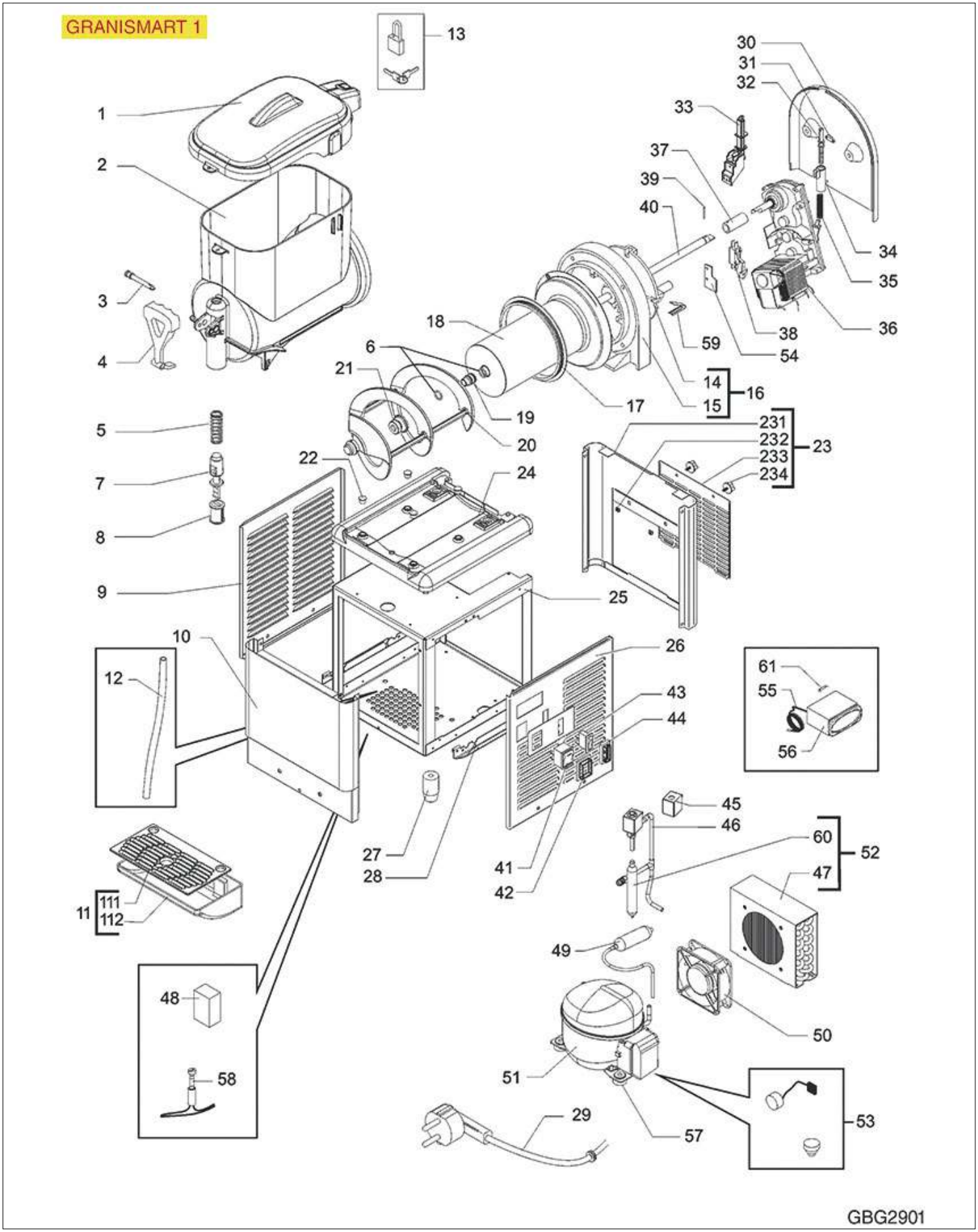

Positions without LF code no.: upon request

GBG

Position	LF code no.	Description
1	1521004	BLACK LID FOR GRANITA MACHINE TANK
2	1521003	TANK 5 L FOR GRANITA MACHINE
3	1357026	DELIVERY TAP CLASP
4	1357025	BLACK TAP CONTROL LEVER
5	1250700	SPRING FOR TAP
6	1786238	ORM GASKET 0015-20 RED SILICONE
7	1357027	DISPENSER TAP PISTON
8	1786239	GASKET FOR DISPENSER TAP
11	1015041	BLACK DRIP TANK
12	1199507	PIPE FOR CONDENSATE OUTLET
17	1197010	TANK GASKET FOR GRANITA MACHINE
19	1704003	BUSHING FOR GRANITA MACHINE SCROLL
20	1719060	GRANITA MACHINE SCROLL ø 147x248 mm
21	1786240	GASKET FOR GRANITA MACHINE SCROLL
27	1313300	SUPPORTING FOOT H=40 mm
31	1199515	RETAINER FOR DENSITY ADJUSTMENT
32	1199516	PIN FOR DENSITY ADJUSTMENT
34	1199311	SPRING GUIDE FOR ADJUSTMENT SYSTEM
36	5035146	GEARMOTOR KENTA K9357511
38	1199309	MICROSWITCH 5A 250V
41	1319202	GREEN TWO-POLE SWITCH 16A 250V
42	3319501	SWITCH PROTECTION CAP
43	1199303	BLACK THREE-POLE SWITCH 16A 250V
45	1199316	COIL CEME B4 230V 50 Hz
50	3240563	MOTOR VENTILATOR EBM 127x127x38 mm
54	1199520	RETAINER FOR GEAR MOTOR
55	1397055	TEMPERATURE PROBE

GRANISMART 2

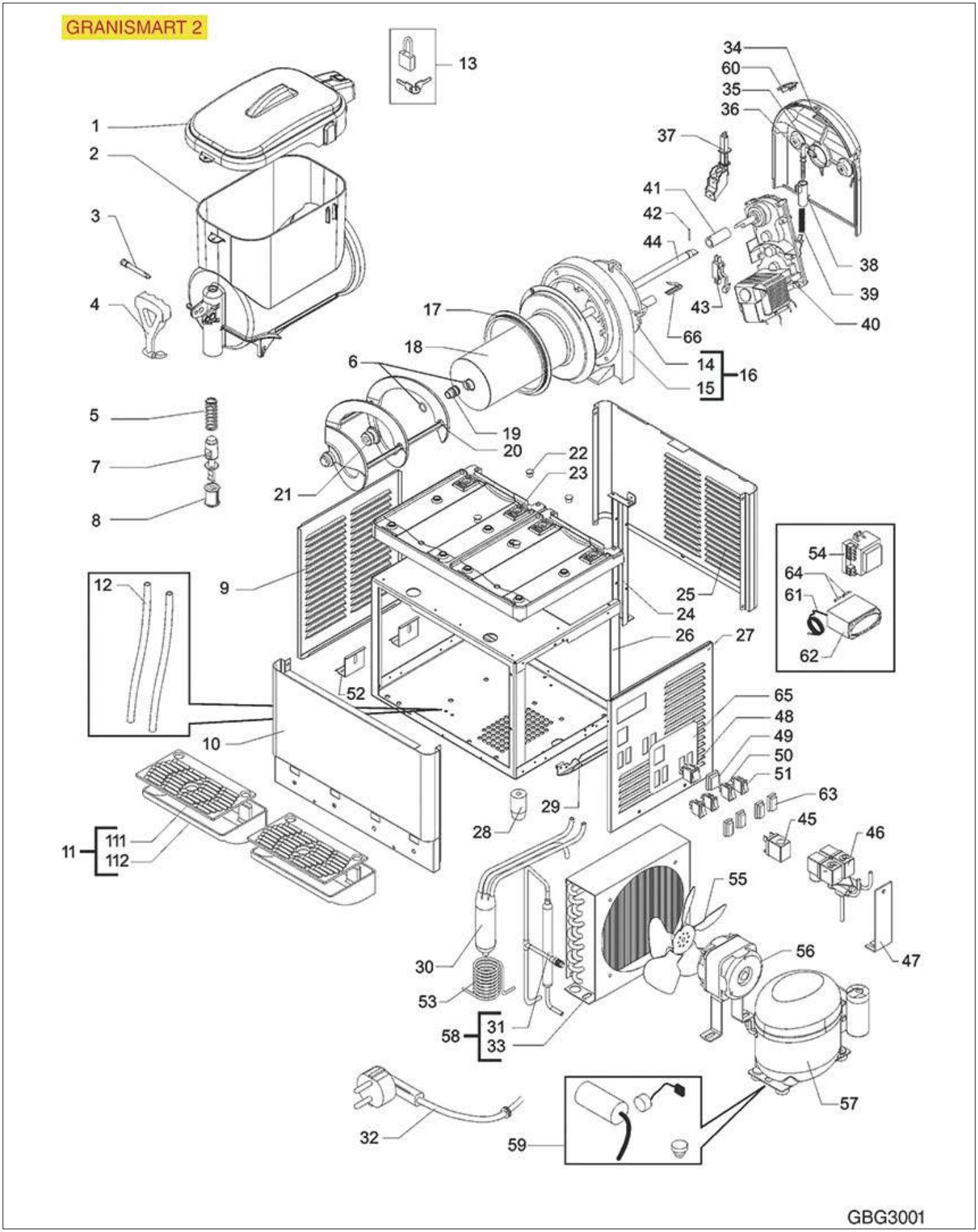

Positions without LF code no.: upon request

GBG

Position	LF code no.	Description
1	1521004	BLACK LID FOR GRANITA MACHINE TANK
2	1521003	TANK 5 L FOR GRANITA MACHINE
3	1357026	DELIVERY TAP CLASP
4	1357025	BLACK TAP CONTROL LEVER
5	1250700	SPRING FOR TAP
6	1786238	ORM GASKET 0015-20 RED SILICONE
7	1357027	DISPENSER TAP PISTON
8	1786239	GASKET FOR DISPENSER TAP
11	1015041	BLACK DRIP TANK
17	1197010	TANK GASKET FOR GRANITA MACHINE
19	1704003	BUSHING FOR GRANITA MACHINE SCROLL
20	1719060	GRANITA MACHINE SCROLL ø 147x248 mm
21	1786240	GASKET FOR GRANITA MACHINE SCROLL
28	1313300	SUPPORTING FOOT H=40 mm
35	1199515	RETAINER FOR DENSITY ADJUSTMENT
36	1199516	PIN FOR DENSITY ADJUSTMENT
38	1199311	SPRING GUIDE FOR ADJUSTMENT SYSTEM
40	5035146	GEARMOTOR KENTA K9357511
43	1199309	MICROSWITCH 5A 250V
45	1199316	COIL CEME B4 230V 50 Hz
46	1120253	2-WAY SOLENOID VALVE CEME
48	1319202	GREEN TWO-POLE SWITCH 16A 250V
49	3319501	SWITCH PROTECTION CAP
50	3319468	BLACK SINGLE POLE SWITCH 16A 250V
61	1397055	TEMPERATURE PROBE
62	5051728	DISPLAY GICAR 9.3.00.58G00

GRANISMART 3

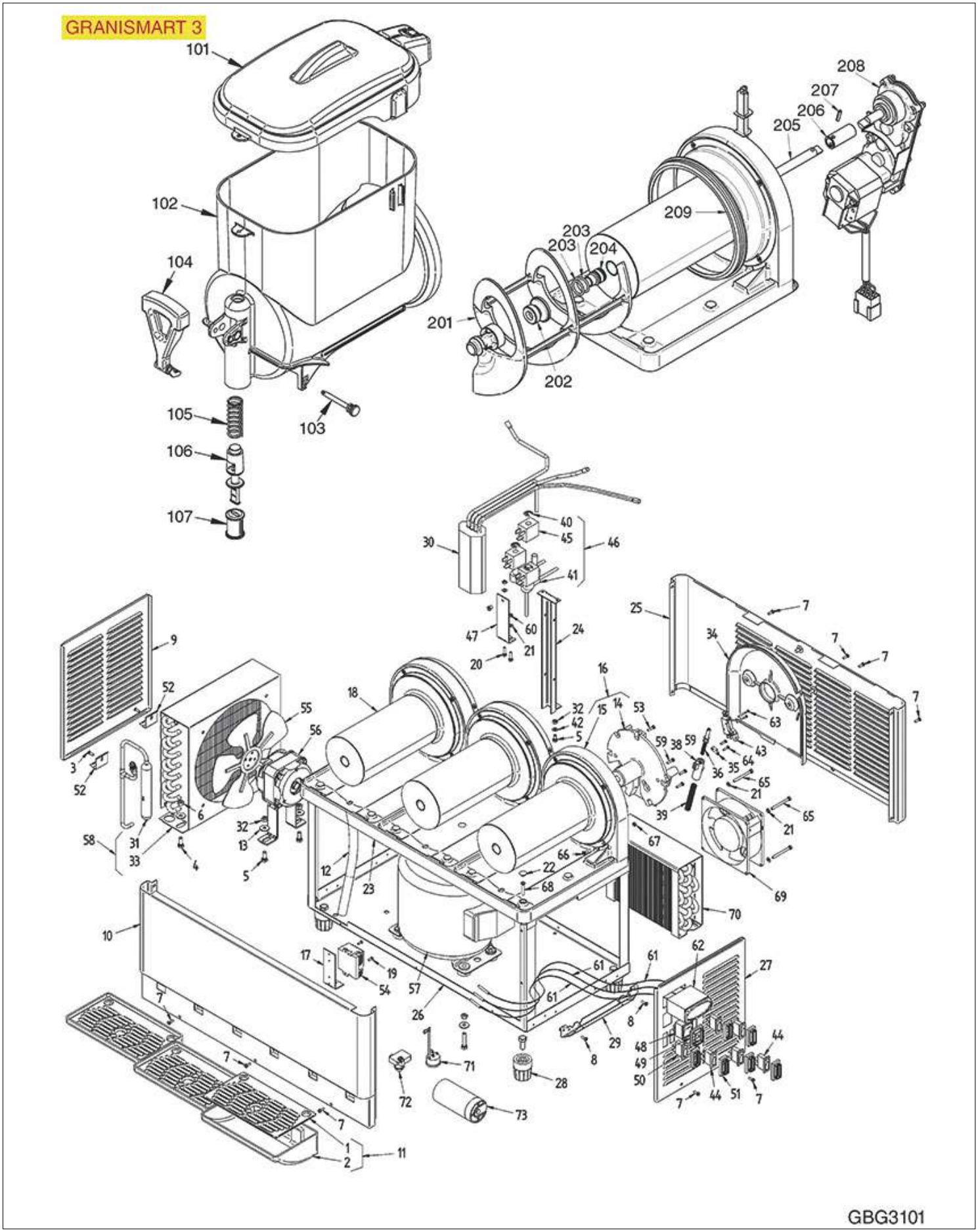

Positions without LF code no.: upon request

GBG

Position	LF code no.	Description
11	1015041	BLACK DRIP TANK
28	1313300	SUPPORTING FOOT H=40 mm
35	1199515	RETAINER FOR DENSITY ADJUSTMENT
36	1199516	PIN FOR DENSITY ADJUSTMENT
38	1199311	SPRING GUIDE FOR ADJUSTMENT SYSTEM
43	1199309	MICROSWITCH 5A 250V
44	3319468	BLACK SINGLE POLE SWITCH 16A 250V
45	1199316	COIL CEME B4 230V 50 Hz
46	1120602	SOLENOID VALVE CEME 5935 3-WAY
48	1319202	GREEN TWO-POLE SWITCH 16A 250V
49	3319501	SWITCH PROTECTION CAP
61	1397055	TEMPERATURE PROBE
62	5051728	DISPLAY GICAR 9.3.00.58G00
69	3240501	AXIAL VENTILATOR SUNON 120x120x38 mm
101	1521004	BLACK LID FOR GRANITA MACHINE TANK
102	1521003	TANK 5 L FOR GRANITA MACHINE
103	1357026	DELIVERY TAP CLASP
104	1357025	BLACK TAP CONTROL LEVER
105	1250700	SPRING FOR TAP
106	1357027	DISPENSER TAP PISTON
107	1786239	GASKET FOR DISPENSER TAP
201	1719060	GRANITA MACHINE SCROLL ø 147x248 mm
202	1786240	GASKET FOR GRANITA MACHINE SCROLL
203	1786238	ORM GASKET 0015-20 RED SILICONE
204	1704003	BUSHING FOR GRANITA MACHINE SCROLL
208	5035146	GEARMOTOR KENTA K9357511
209	1197010	TANK GASKET FOR GRANITA MACHINE

GRANISMART 1BRS

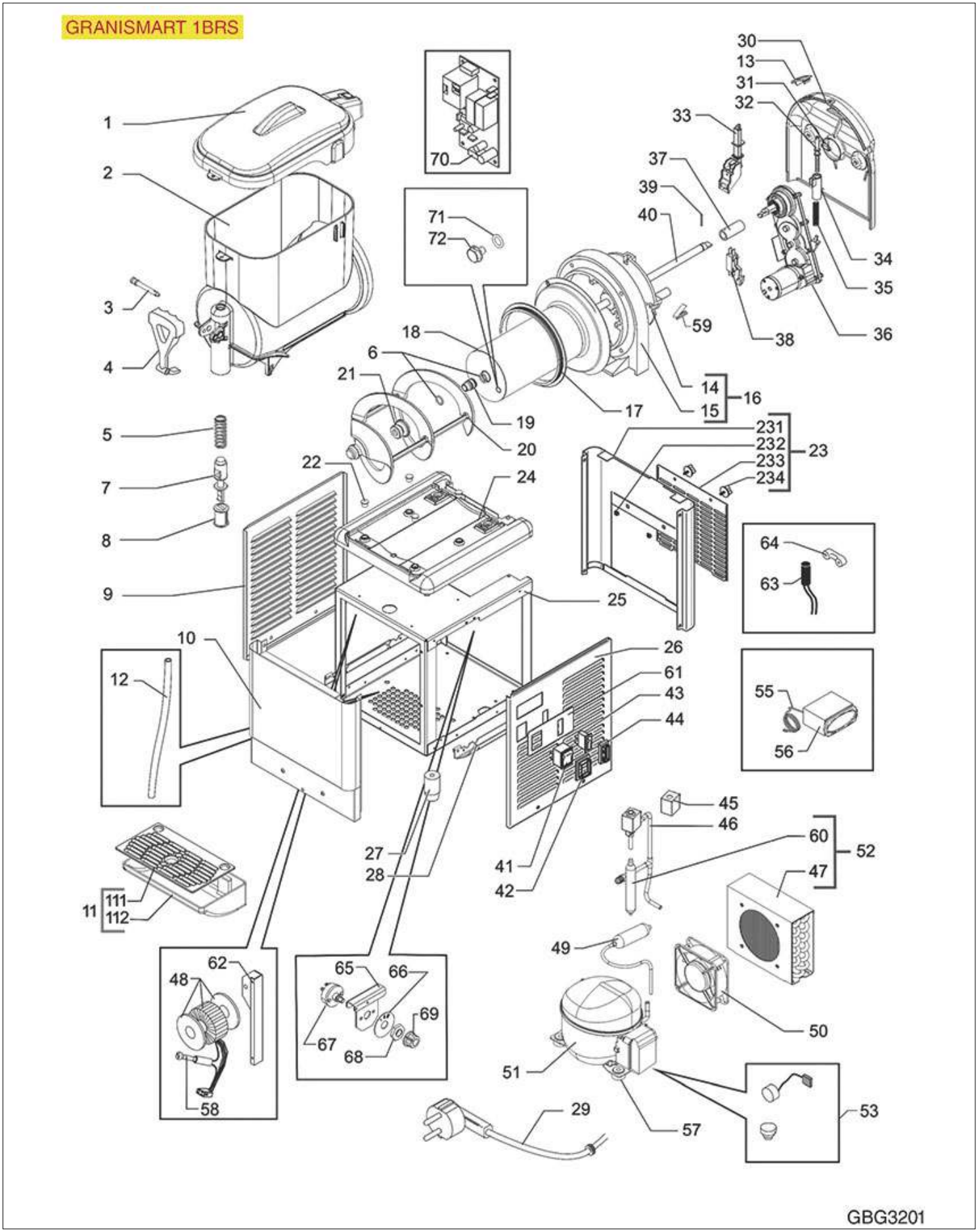

Positions without LF code no.: upon request

GBG

Position	LF code no.	Description
1	1521004	BLACK LID FOR GRANITA MACHINE TANK
2	1521003	TANK 5 L FOR GRANITA MACHINE
3	1357026	DELIVERY TAP CLASP
4	1357025	BLACK TAP CONTROL LEVER
5	1250700	SPRING FOR TAP
6	1786238	ORM GASKET 0015-20 RED SILICONE
7	1357027	DISPENSER TAP PISTON
8	1786239	GASKET FOR DISPENSER TAP
11	1015041	BLACK DRIP TANK
17	1197010	TANK GASKET FOR GRANITA MACHINE
19	1704003	BUSHING FOR GRANITA MACHINE SCROLL
20	1719060	GRANITA MACHINE SCROLL ø 147x248 mm
21	1786240	GASKET FOR GRANITA MACHINE SCROLL
27	1313300	SUPPORTING FOOT H=40 mm
31	1199515	RETAINER FOR DENSITY ADJUSTMENT
32	1199516	PIN FOR DENSITY ADJUSTMENT
34	1199311	SPRING GUIDE FOR ADJUSTMENT SYSTEM
38	1199309	MICROSWITCH 5A 250V
41	1319202	GREEN TWO-POLE SWITCH 16A 250V
42	3319501	SWITCH PROTECTION CAP
45	1199316	COIL CEME B4 230V 50 Hz
50	3240563	MOTOR VENTILATOR EBM 127x127x38 mm
55	1397055	TEMPERATURE PROBE

GRANISMART 2BRS

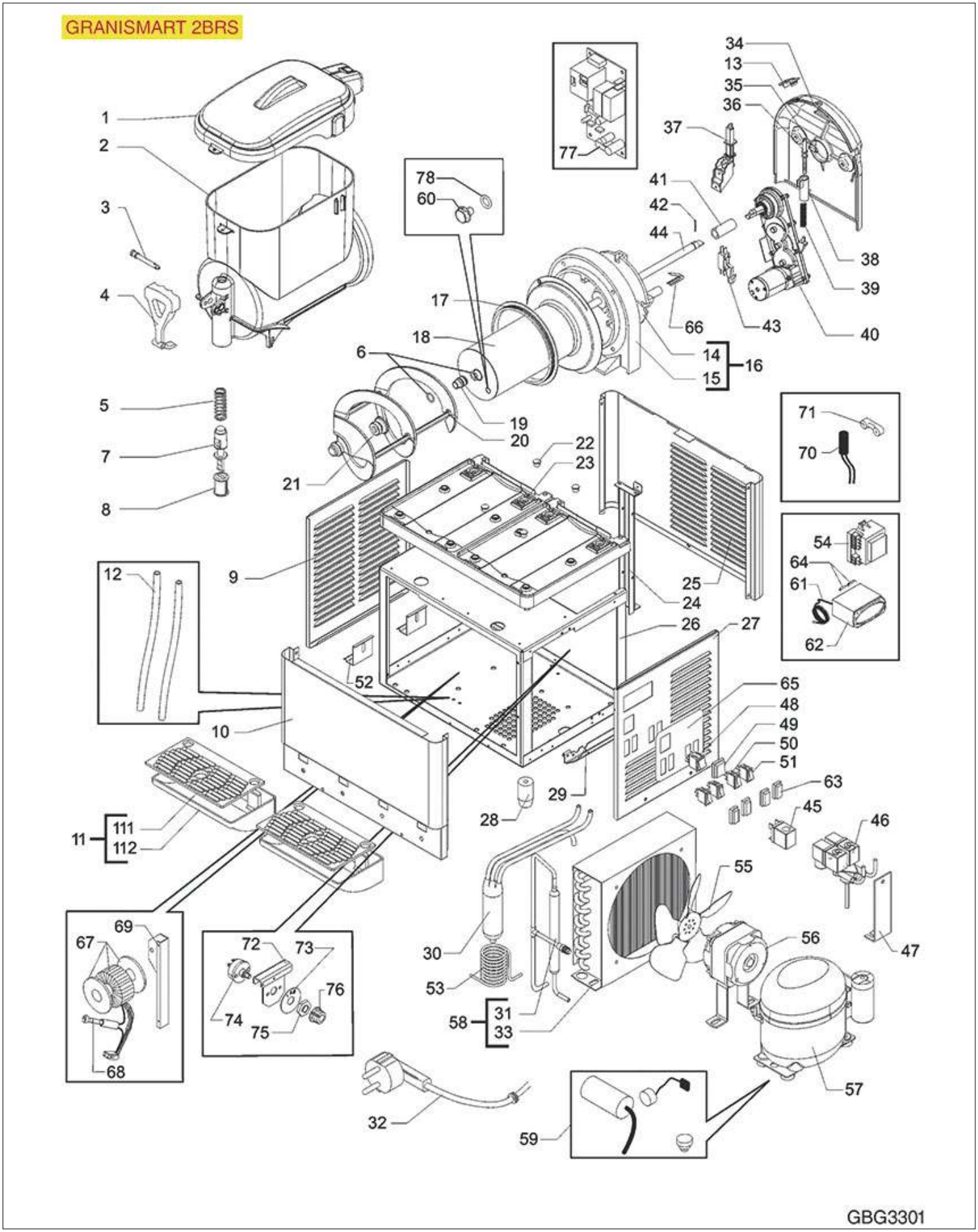

Positions without LF code no.: upon request

GBG

Position	LF code no.	Description
1	1521004	BLACK LID FOR GRANITA MACHINE TANK
2	1521003	TANK 5 L FOR GRANITA MACHINE
3	1357026	DELIVERY TAP CLASP
4	1357025	BLACK TAP CONTROL LEVER
5	1250700	SPRING FOR TAP
6	1786238	ORM GASKET 0015-20 RED SILICONE
7	1357027	DISPENSER TAP PISTON
8	1786239	GASKET FOR DISPENSER TAP
11	1015041	BLACK DRIP TANK
17	1197010	TANK GASKET FOR GRANITA MACHINE
19	1704003	BUSHING FOR GRANITA MACHINE SCROLL
20	1719060	GRANITA MACHINE SCROLL ø 147x248 mm
21	1786240	GASKET FOR GRANITA MACHINE SCROLL
28	1313300	SUPPORTING FOOT H=40 mm
35	1199515	RETAINER FOR DENSITY ADJUSTMENT
36	1199516	PIN FOR DENSITY ADJUSTMENT
38	1199311	SPRING GUIDE FOR ADJUSTMENT SYSTEM
43	1199309	MICROSWITCH 5A 250V
45	1199316	COIL CEME B4 230V 50 Hz
46	1120253	2-WAY SOLENOID VALVE CEME
48	1319202	GREEN TWO-POLE SWITCH 16A 250V
49	3319501	SWITCH PROTECTION CAP
50	3319468	BLACK SINGLE POLE SWITCH 16A 250V
61	1397055	TEMPERATURE PROBE

GRANICREAM 6-1

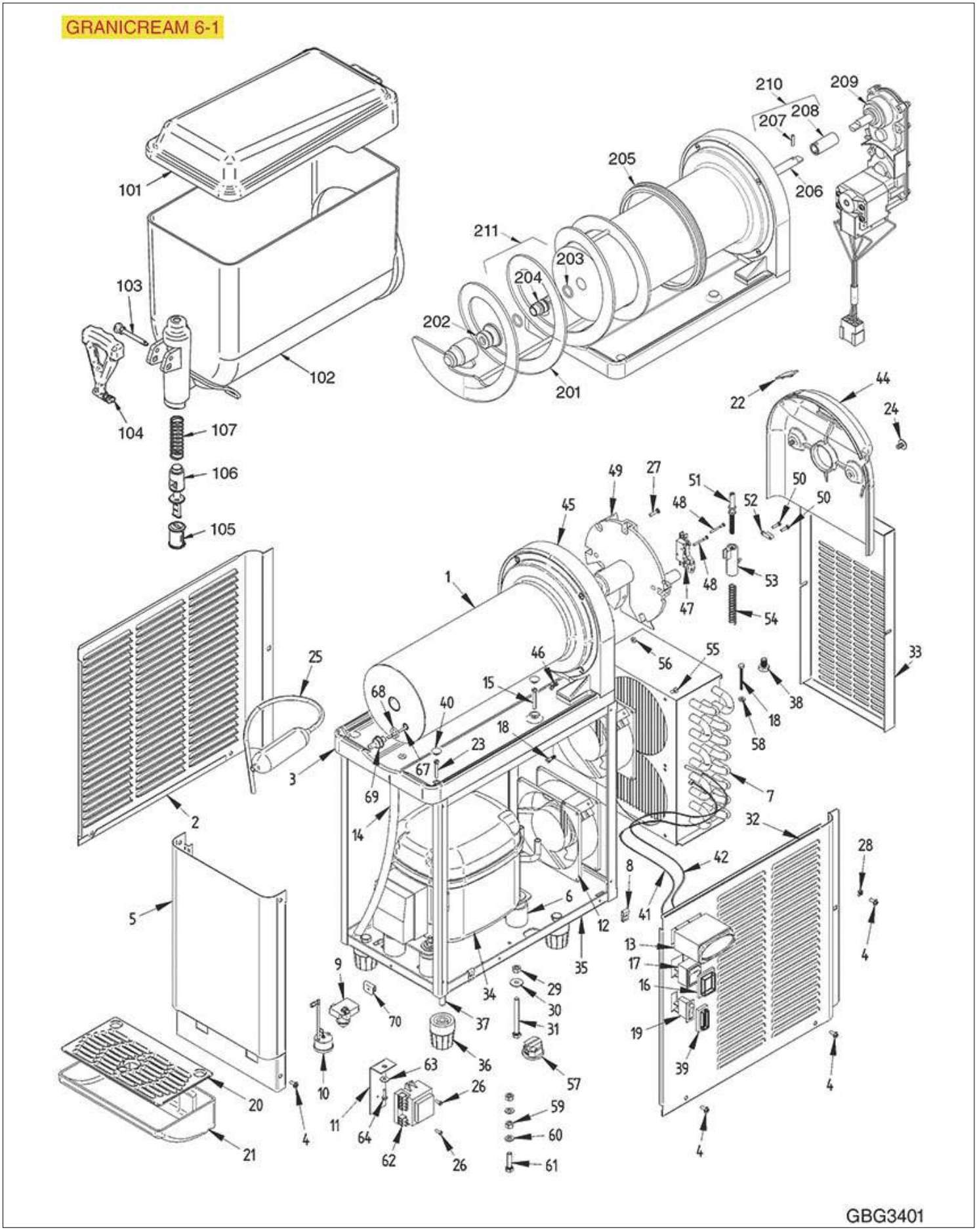

Positions without LF code no.: upon request

GBG

Position	LF code no.	Description
12	3240501	AXIAL VENTILATOR SUNON 120x120x38 mm
16	3319501	SWITCH PROTECTION CAP
17	1319202	GREEN TWO-POLE SWITCH 16A 250V
36	1313300	SUPPORTING FOOT H=40 mm
42	1397055	TEMPERATURE PROBE
47	1199309	MICROSWITCH 5A 250V
51	1199516	PIN FOR DENSITY ADJUSTMENT
52	1199515	RETAINER FOR DENSITY ADJUSTMENT
53	1199311	SPRING GUIDE FOR ADJUSTMENT SYSTEM
54	1250701	SPRING FOR DENSITY ADJUSTMENT
103	1357026	DELIVERY TAP CLASP
104	1357025	BLACK TAP CONTROL LEVER
105	1786239	GASKET FOR DISPENSER TAP
106	1357027	DISPENSER TAP PISTON
202	1786240	GASKET FOR GRANITA MACHINE SCROLL
203	1786238	ORM GASKET 0015-20 RED SILICONE
204	1704003	BUSHING FOR GRANITA MACHINE SCROLL
205	1199322	EVAPORATOR GASKET ø 170 mm
209	5035146	GEARMOTOR KENTA K9357511
210	1199518	SHAFT COUPLING WITH BUSHING

GRANICREAM 10-1

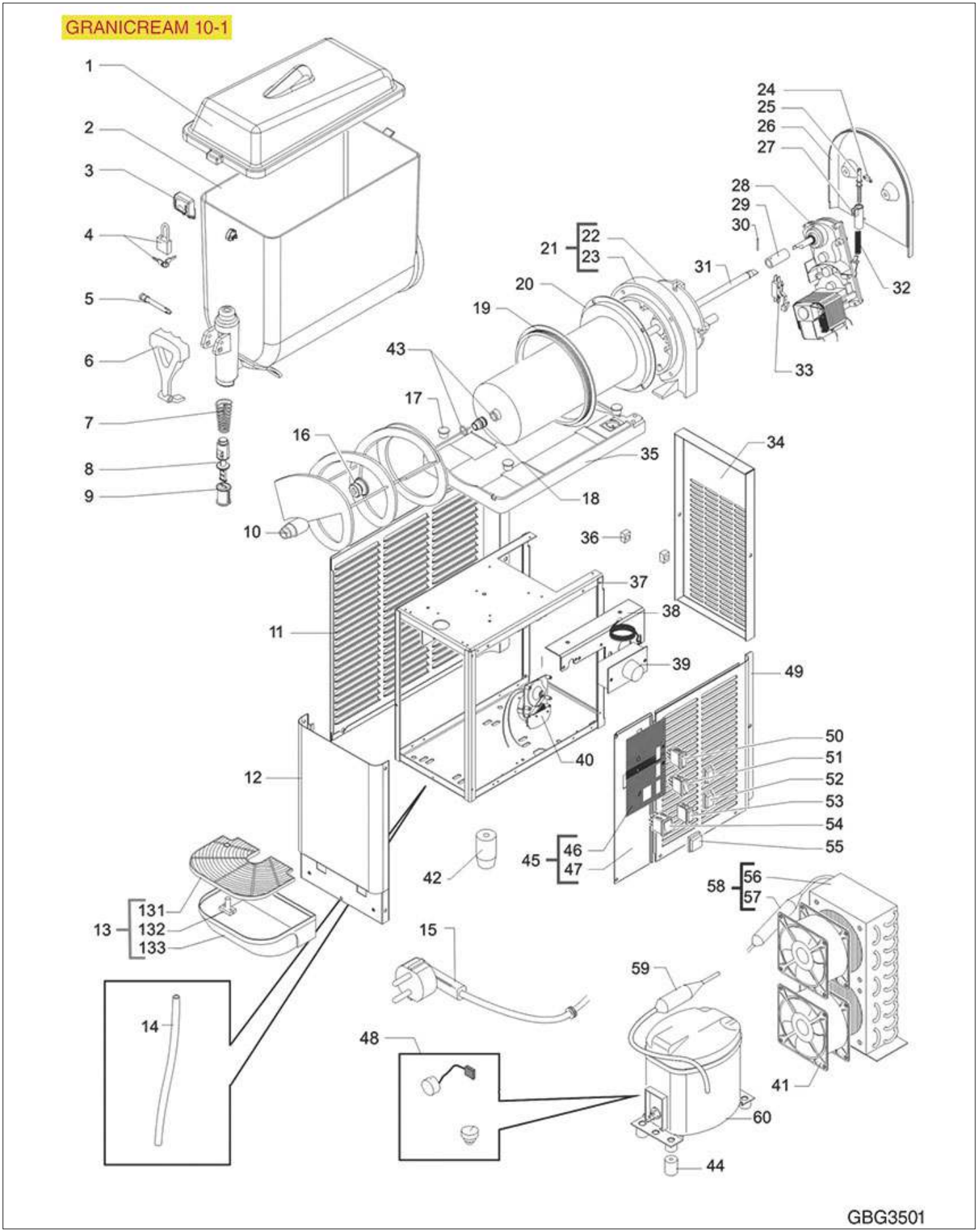

Positions without LF code no.: upon request

GBG

Position	LF code no.	Description
5	1357026	DELIVERY TAP CLASP
6	1357025	BLACK TAP CONTROL LEVER
8	1357027	DISPENSER TAP PISTON
9	1786239	GASKET FOR DISPENSER TAP
10	1199320	NEW SCROLL ADAPTER KIT
14	1199507	PIPE FOR CONDENSATE OUTLET
16	1786240	GASKET FOR GRANITA MACHINE SCROLL
18	1704003	BUSHING FOR GRANITA MACHINE SCROLL
19	1199322	EVAPORATOR GASKET ø 170 mm
24	1199515	RETAINER FOR DENSITY ADJUSTMENT
25	1199516	PIN FOR DENSITY ADJUSTMENT
27	1199311	SPRING GUIDE FOR ADJUSTMENT SYSTEM
28	5035146	GEARMOTOR KENTA K9357511
32	1250701	SPRING FOR DENSITY ADJUSTMENT
33	1199309	MICROSWITCH 5A 250V
39	1444107	THERMOSTAT RANCO K50 L3231
41	3240501	AXIAL VENTILATOR SUNON 120x120x38 mm
42	1313300	SUPPORTING FOOT H=40 mm
43	1786238	ORM GASKET 0015-20 RED SILICONE
50	1199303	BLACK THREE-POLE SWITCH 16A 250V
51	3319468	BLACK SINGLE POLE SWITCH 16A 250V
54	1319202	GREEN TWO-POLE SWITCH 16A 250V
55	3319501	SWITCH PROTECTION CAP

GRANICREAM 10-2

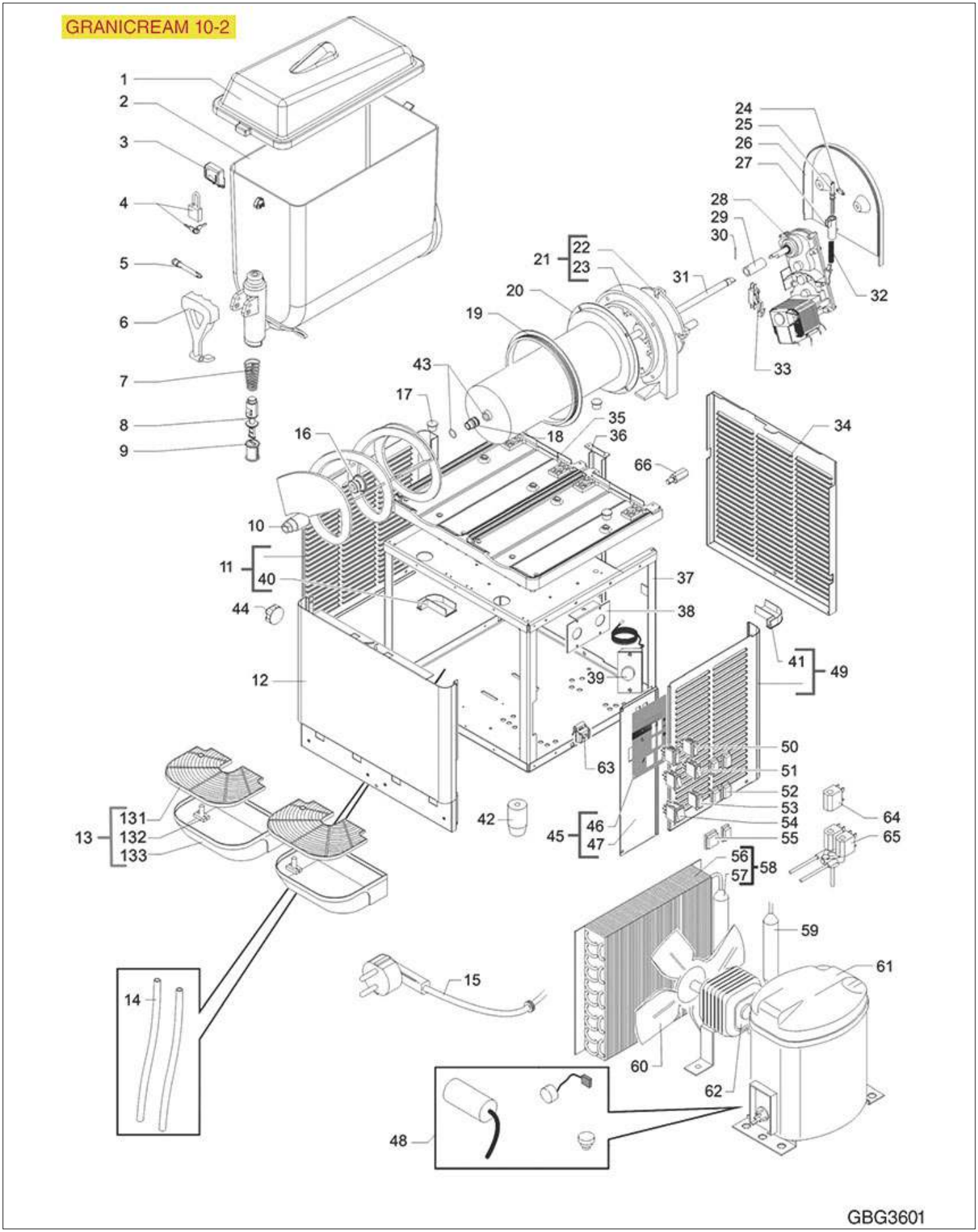

Positions without LF code no.: upon request

GBG

Position	LF code no.	Description
5	1357026	DELIVERY TAP CLASP
6	1357025	BLACK TAP CONTROL LEVER
8	1357027	DISPENSER TAP PISTON
9	1786239	GASKET FOR DISPENSER TAP
10	1199320	NEW SCROLL ADAPTER KIT
14	1199507	PIPE FOR CONDENSATE OUTLET
16	1786240	GASKET FOR GRANITA MACHINE SCROLL
18	1704003	BUSHING FOR GRANITA MACHINE SCROLL
19	1199322	EVAPORATOR GASKET ø 170 mm
24	1199515	RETAINER FOR DENSITY ADJUSTMENT
25	1199516	PIN FOR DENSITY ADJUSTMENT
27	1199311	SPRING GUIDE FOR ADJUSTMENT SYSTEM
28	5035146	GEARMOTOR KENTA K9357511
32	1250701	SPRING FOR DENSITY ADJUSTMENT
33	1199309	MICROSWITCH 5A 250V
39	1444107	THERMOSTAT RANCO K50 L3231
42	1313300	SUPPORTING FOOT H=40 mm
43	1786238	ORM GASKET 0015-20 RED SILICONE
50	1199303	BLACK THREE-POLE SWITCH 16A 250V
51	3319468	BLACK SINGLE POLE SWITCH 16A 250V
54	1319202	GREEN TWO-POLE SWITCH 16A 250V
55	3319501	SWITCH PROTECTION CAP
60	3240964	SUCTION BLADE ø 250 mm 28°
64	1199316	COIL CEME B4 230V 50 Hz
65	1120253	2-WAY SOLENOID VALVE CEME

GRANICREAM 10-3

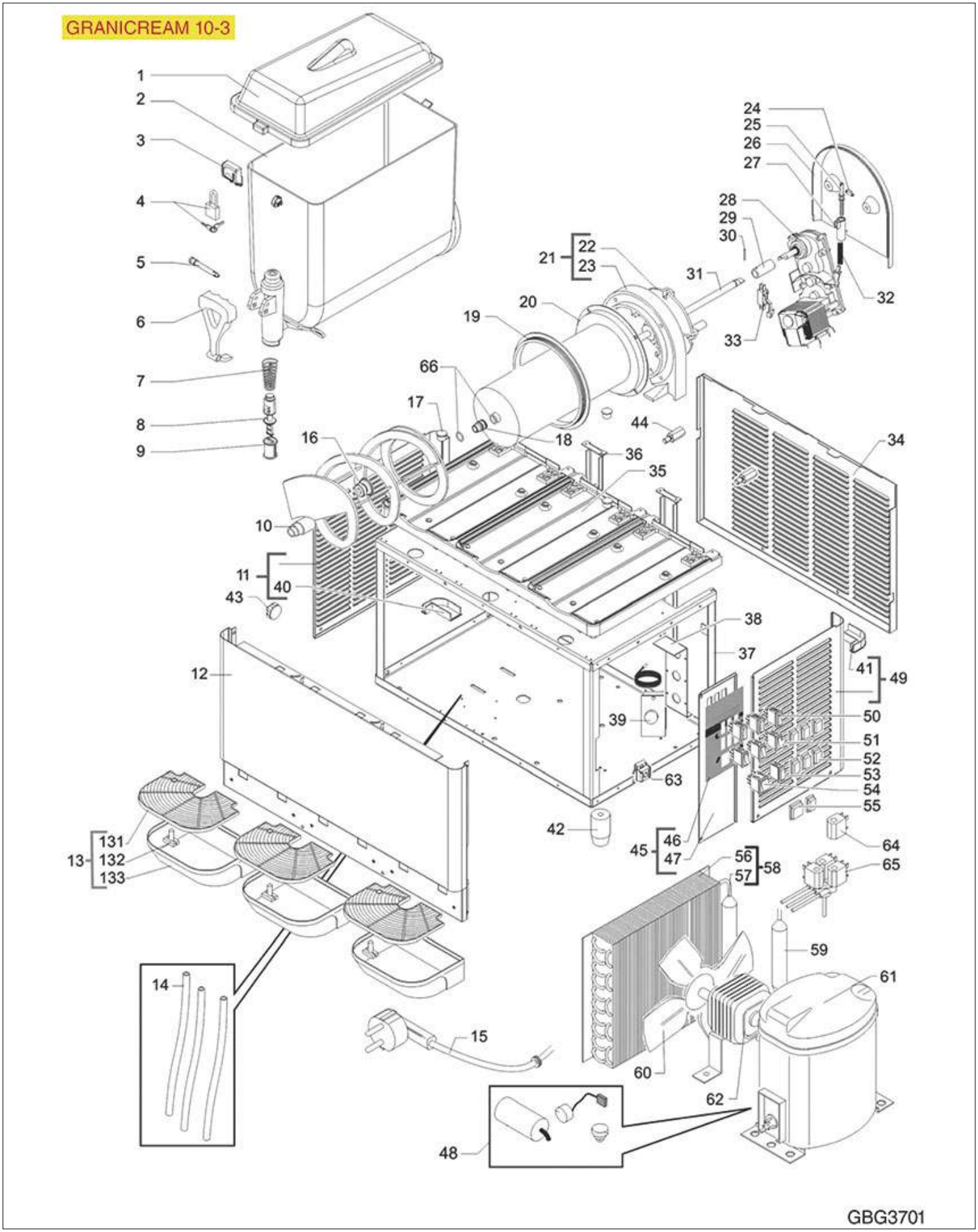

Positions without LF code no.: upon request

GBG

Position	LF code no.	Description
5	1357026	DELIVERY TAP CLASP
6	1357025	BLACK TAP CONTROL LEVER
8	1357027	DISPENSER TAP PISTON
9	1786239	GASKET FOR DISPENSER TAP
10	1199320	NEW SCROLL ADAPTER KIT
14	1199507	PIPE FOR CONDENSATE OUTLET
16	1786240	GASKET FOR GRANITA MACHINE SCROLL
18	1704003	BUSHING FOR GRANITA MACHINE SCROLL
19	1199322	EVAPORATOR GASKET ø 170 mm
24	1199515	RETAINER FOR DENSITY ADJUSTMENT
25	1199516	PIN FOR DENSITY ADJUSTMENT
27	1199311	SPRING GUIDE FOR ADJUSTMENT SYSTEM
28	5035146	GEARMOTOR KENTA K9357511
32	1250701	SPRING FOR DENSITY ADJUSTMENT
33	1199309	MICROSWITCH 5A 250V
39	1444107	THERMOSTAT RANCO K50 L3231
42	1313300	SUPPORTING FOOT H=40 mm
50	1199303	BLACK THREE-POLE SWITCH 16A 250V
51	3319468	BLACK SINGLE POLE SWITCH 16A 250V
54	1319202	GREEN TWO-POLE SWITCH 16A 250V
55	3319501	SWITCH PROTECTION CAP
60	3240964	SUCTION BLADE ø 250 mm 28°
64	1199316	COIL CEME B4 230V 50 Hz
66	1786238	ORM GASKET 0015-20 RED SILICONE

SPIN 12-1

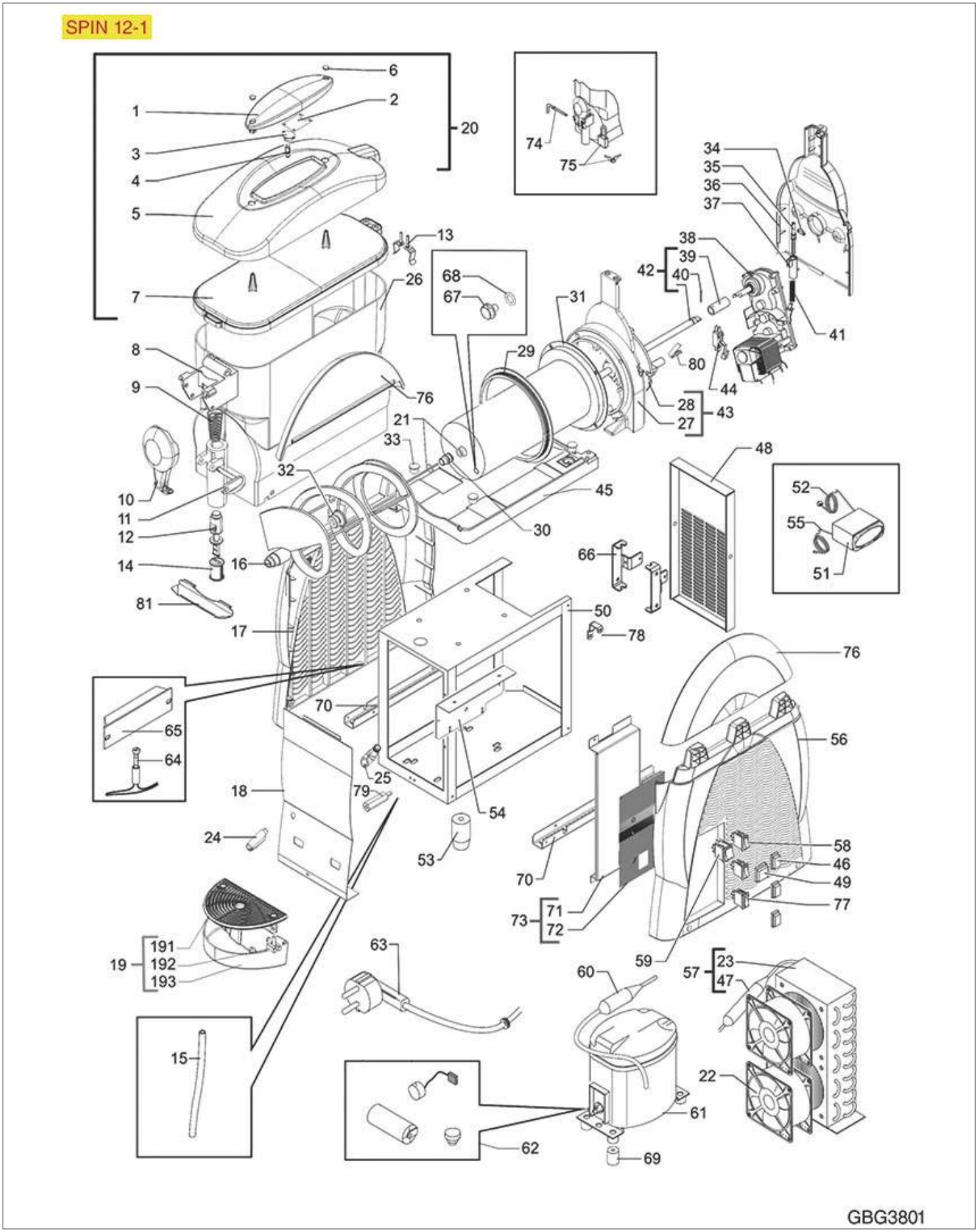

Positions without LF code no.: upon request

GBG

Position	LF code no.	Description
4	3221250	NEUTRAL HALOGEN LAMP G4 10W 12V
8	1199502	TAP SUPPORT
9	1250700	SPRING FOR TAP
11	1199504	TAP SPINDLE
12	1357027	DISPENSER TAP PISTON
14	1786239	GASKET FOR DISPENSER TAP
16	1199508	SCROLL GRANITA MACHINE
21	1786238	ORM GASKET 0015-20 RED SILICONE
22	3240501	AXIAL VENTILATOR SUNON 120x120x38 mm
29	1199322	EVAPORATOR GASKET ø 170 mm
30	1704003	BUSHING FOR GRANITA MACHINE SCROLL
32	1786240	GASKET FOR GRANITA MACHINE SCROLL
34	1199515	RETAINER FOR DENSITY ADJUSTMENT
35	1199516	PIN FOR DENSITY ADJUSTMENT
37	1199311	SPRING GUIDE FOR ADJUSTMENT SYSTEM
38	5035146	GEARMOTOR KENTA K9357511
41	1250701	SPRING FOR DENSITY ADJUSTMENT
42	1199518	SHAFT COUPLING WITH BUSHING
44	1199309	MICROSWITCH 5A 250V
49	3319501	SWITCH PROTECTION CAP
53	1313300	SUPPORTING FOOT H=40 mm
55	1397055	TEMPERATURE PROBE
58	3319468	BLACK SINGLE POLE SWITCH 16A 250V
59	1319202	GREEN TWO-POLE SWITCH 16A 250V
77	1199303	BLACK THREE-POLE SWITCH 16A 250V

SPIN 12-2

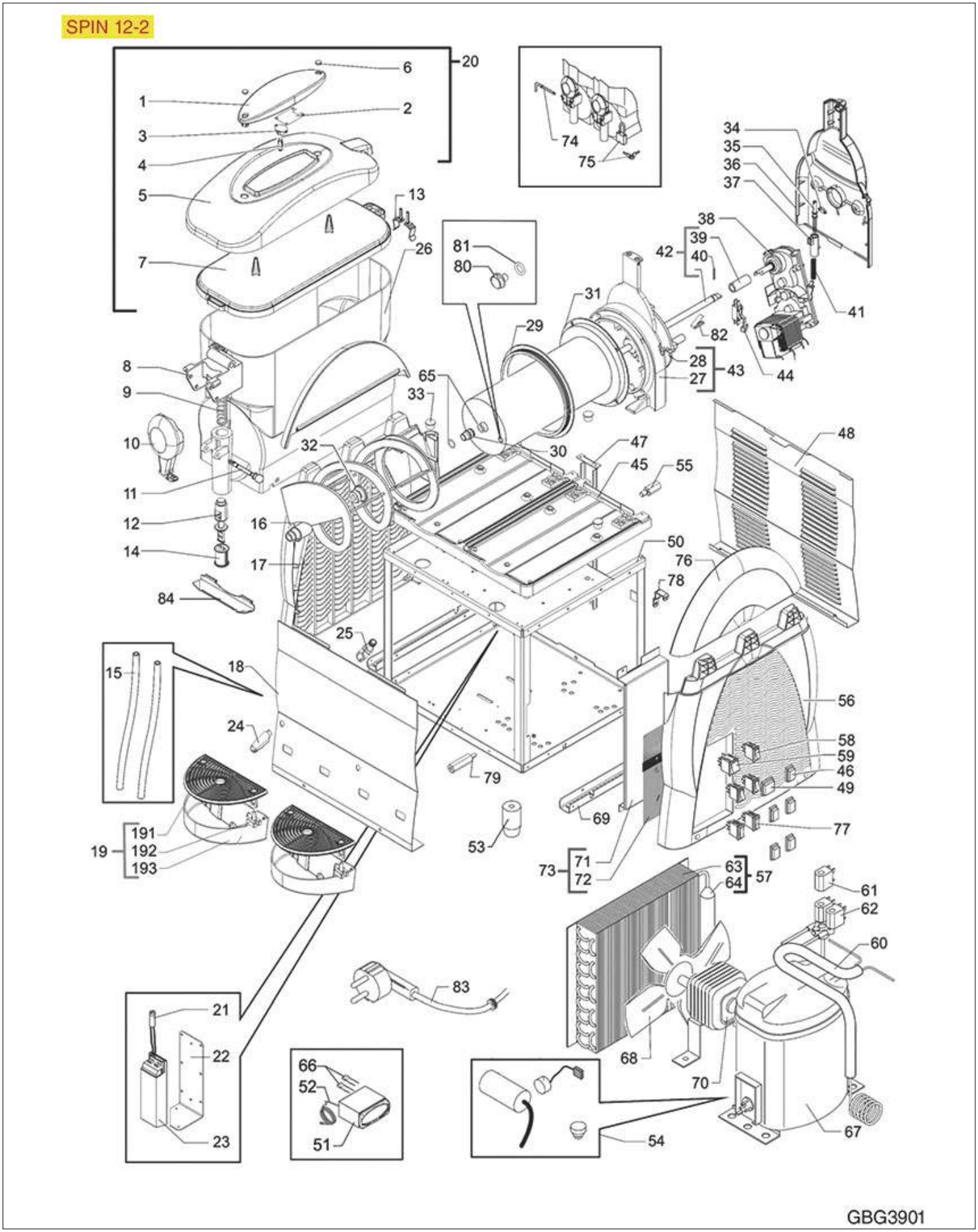

Positions without LF code no.: upon request

GBG

Position	LF code no.	Description
4	3221250	NEUTRAL HALOGEN LAMP G4 10W 12V
8	1199502	TAP SUPPORT
9	1250700	SPRING FOR TAP
11	1199504	TAP SPINDLE
12	1357027	DISPENSER TAP PISTON
14	1786239	GASKET FOR DISPENSER TAP
16	1199508	SCROLL GRANITA MACHINE
29	1199322	EVAPORATOR GASKET ø 170 mm
30	1704003	BUSHING FOR GRANITA MACHINE SCROLL
32	1786240	GASKET FOR GRANITA MACHINE SCROLL
34	1199515	RETAINER FOR DENSITY ADJUSTMENT
35	1199516	PIN FOR DENSITY ADJUSTMENT
37	1199311	SPRING GUIDE FOR ADJUSTMENT SYSTEM
38	5035146	GEARMOTOR KENTA K9357511
41	1250701	SPRING FOR DENSITY ADJUSTMENT
42	1199518	SHAFT COUPLING WITH BUSHING
44	1199309	MICROSWITCH 5A 250V
49	3319501	SWITCH PROTECTION CAP
53	1313300	SUPPORTING FOOT H=40 mm
58	3319468	BLACK SINGLE POLE SWITCH 16A 250V
59	1319202	GREEN TWO-POLE SWITCH 16A 250V
61	1199316	COIL CEME B4 230V 50 Hz
62	1120253	2-WAY SOLENOID VALVE CEME
65	1786238	ORM GASKET 0015-20 RED SILICONE
68	3240964	SUCTION BLADE ø 250 mm 28°
77	1199303	BLACK THREE-POLE SWITCH 16A 250V

SPIN 12-3

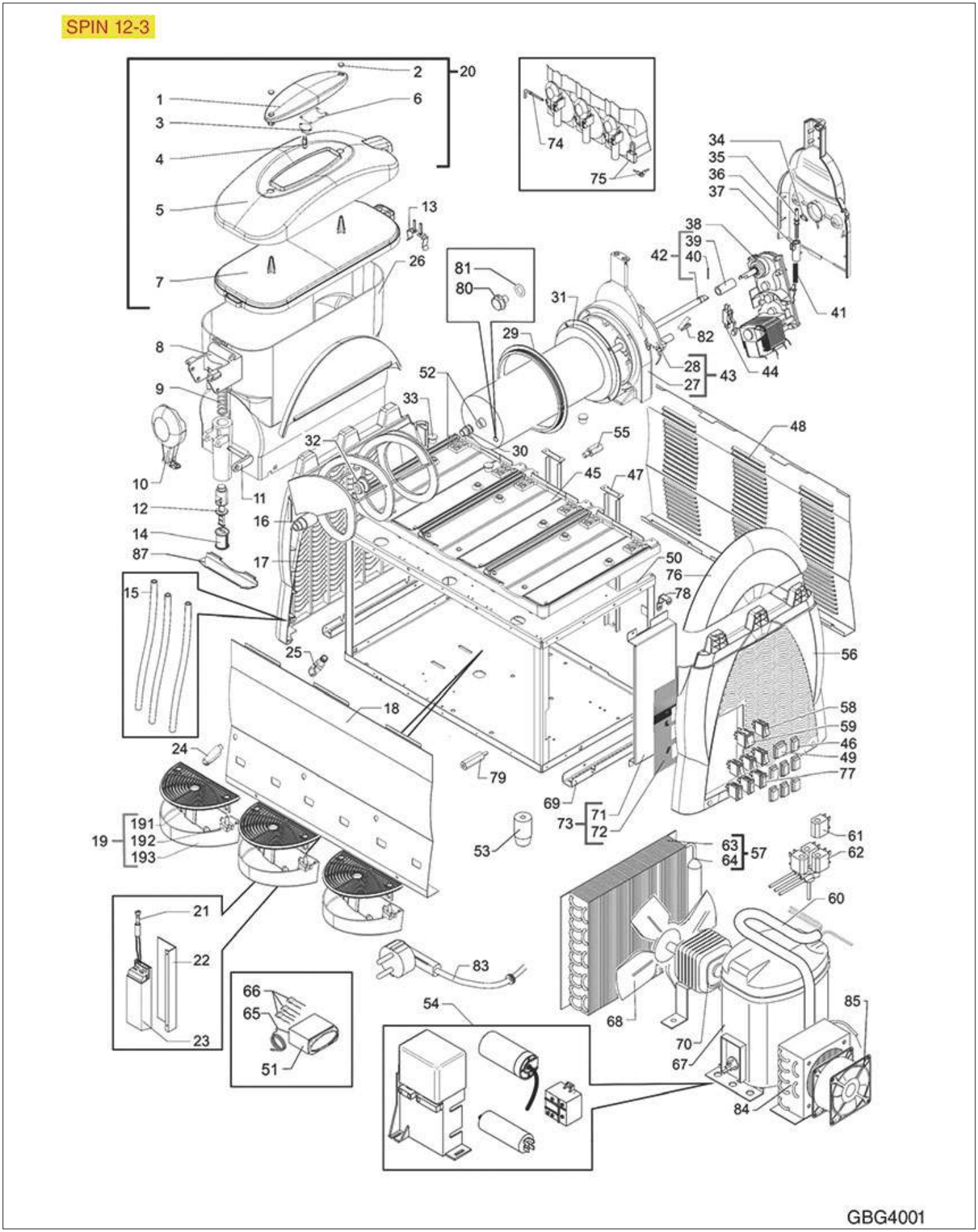

Positions without LF code no.: upon request

GBG

Position	LF code no.	Description
4	3221250	NEUTRAL HALOGEN LAMP G4 10W 12V
8	1199502	TAP SUPPORT
9	1250700	SPRING FOR TAP
11	1199504	TAP SPINDLE
12	1357027	DISPENSER TAP PISTON
14	1786239	GASKET FOR DISPENSER TAP
16	1199508	SCROLL GRANITA MACHINE
29	1199322	EVAPORATOR GASKET ø 170 mm
30	1704003	BUSHING FOR GRANITA MACHINE SCROLL
32	1786240	GASKET FOR GRANITA MACHINE SCROLL
34	1199515	RETAINER FOR DENSITY ADJUSTMENT
35	1199516	PIN FOR DENSITY ADJUSTMENT
37	1199311	SPRING GUIDE FOR ADJUSTMENT SYSTEM
38	5035146	GEARMOTOR KENTA K9357511
41	1250701	SPRING FOR DENSITY ADJUSTMENT
42	1199518	SHAFT COUPLING WITH BUSHING
44	1199309	MICROSWITCH 5A 250V
49	3319501	SWITCH PROTECTION CAP
52	1786238	ORM GASKET 0015-20 RED SILICONE
53	1313300	SUPPORTING FOOT H=40 mm
58	3319468	BLACK SINGLE POLE SWITCH 16A 250V
59	1319202	GREEN TWO-POLE SWITCH 16A 250V
61	1199316	COIL CEME B4 230V 50 Hz
62	1120602	SOLENOID VALVE CEME 5935 3-WAY
68	3240964	SUCTION BLADE ø 250 mm 28°
77	1199303	BLACK THREE-POLE SWITCH 16A 250V
85	3240501	AXIAL VENTILATOR SUNON 120x120x38 mm

GRANISMART 1EVO

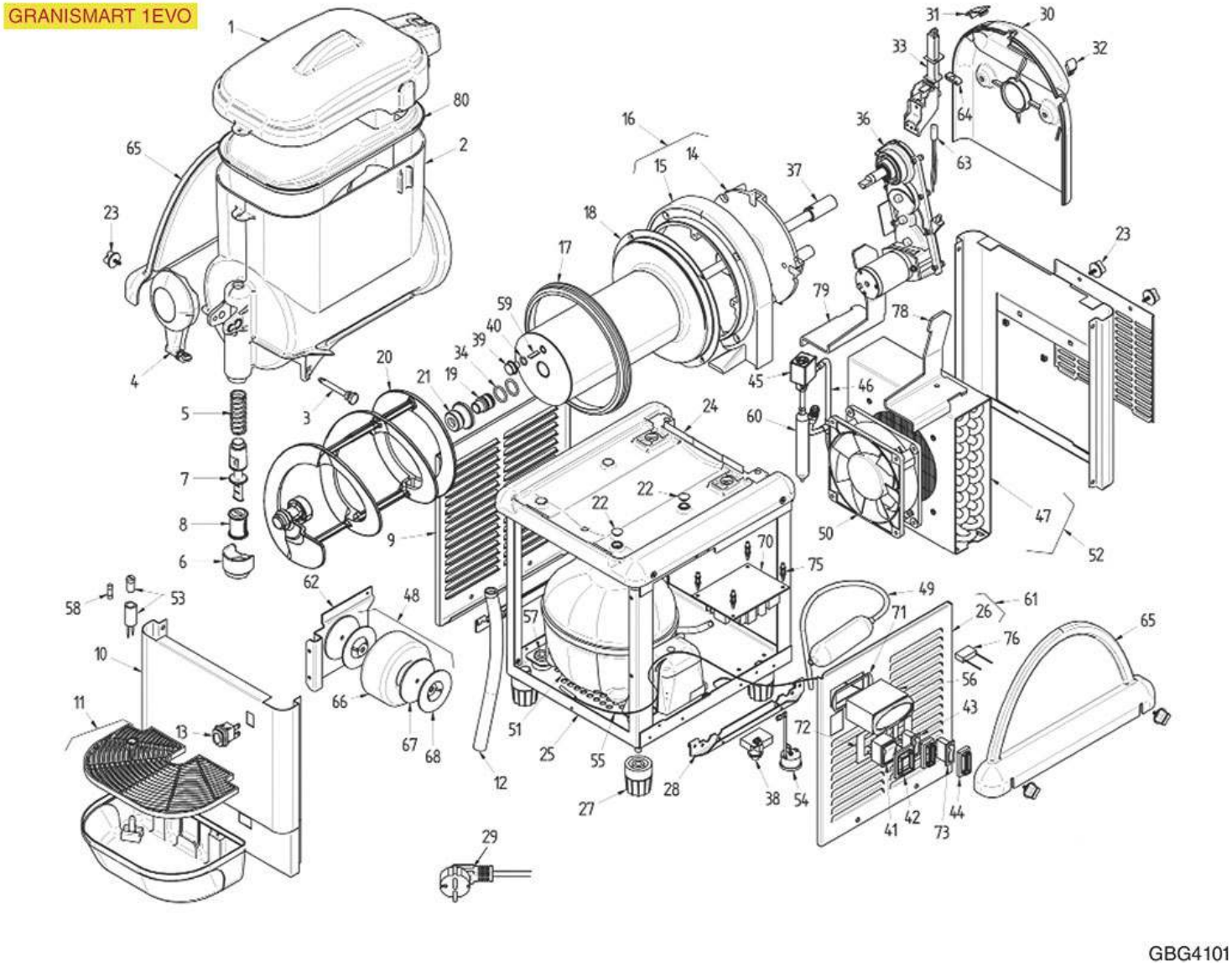

Positions without LF code no.: upon request

GBG

Position	LF code no.	Description
3	1199350	SPINDLE FOR TAP LEVER
5	1250700	SPRING FOR TAP
7	1357027	DISPENSER TAP PISTON
8	1786239	GASKET FOR DISPENSER TAP
17	1197010	TANK GASKET FOR GRANITA MACHINE
19	1704003	BUSHING FOR GRANITA MACHINE SCROLL
21	1786240	GASKET FOR GRANITA MACHINE SCROLL
27	1313300	SUPPORTING FOOT H=40 mm
34	1786238	ORM GASKET 0015-20 RED SILICONE
41	3319012	GREEN BIPOLAR SWITCH 16A 250V
42	3319501	SWITCH PROTECTION CAP
50	3240563	MOTOR VENTILATOR EBM 127x127x38 mm
55	1397055	TEMPERATURE PROBE

GRANISMART 2EVO

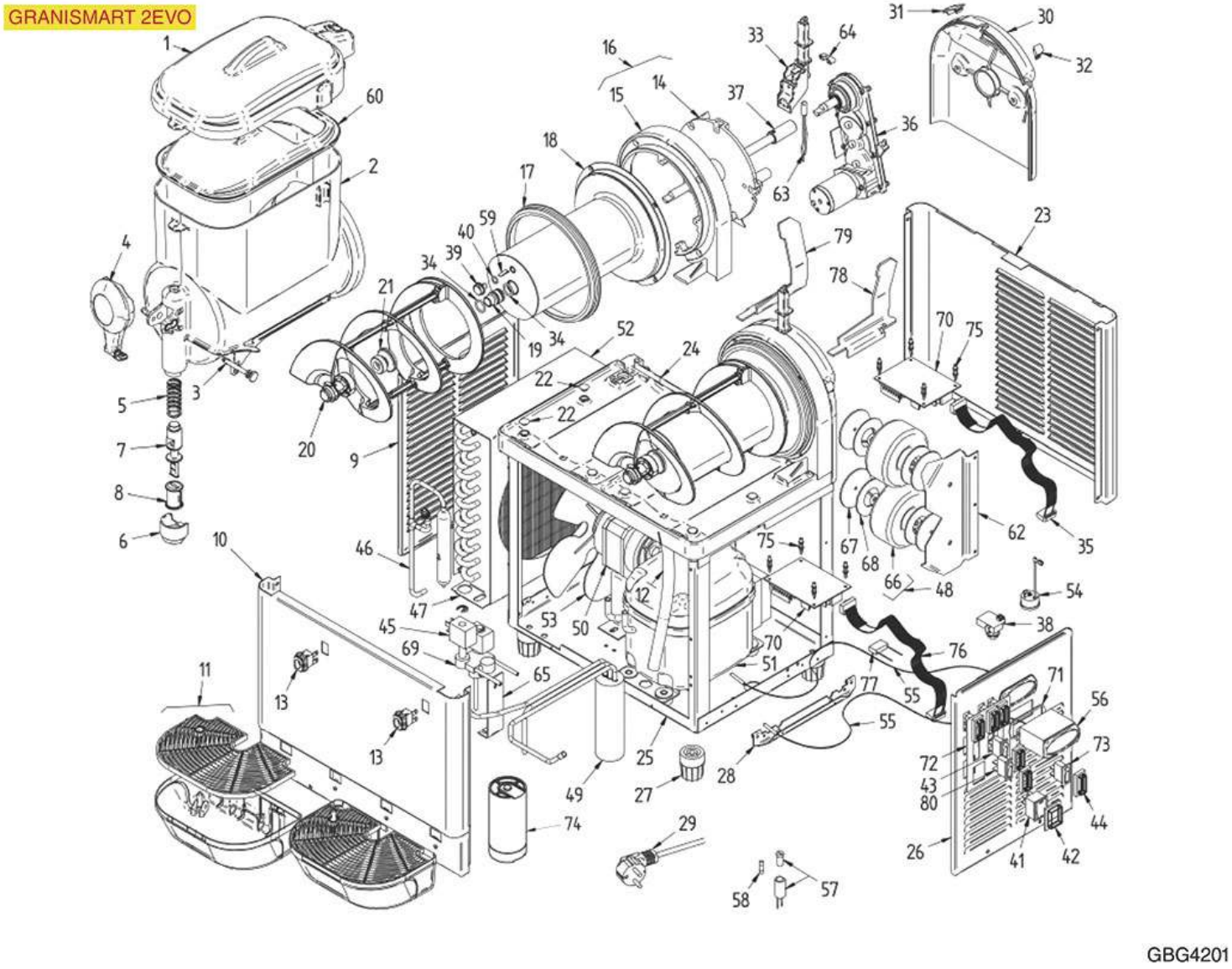

Positions without LF code no.: upon request

GBG

Position	LF code no.	Description
3	1199350	SPINDLE FOR TAP LEVER
5	1250700	SPRING FOR TAP
7	1357027	DISPENSER TAP PISTON
8	1786239	GASKET FOR DISPENSER TAP
17	1197010	TANK GASKET FOR GRANITA MACHINE
19	1704003	BUSHING FOR GRANITA MACHINE SCROLL
21	1786240	GASKET FOR GRANITA MACHINE SCROLL
27	1313300	SUPPORTING FOOT H=40 mm
34	1786238	ORM GASKET 0015-20 RED SILICONE
41	3319012	GREEN BIPOLAR SWITCH 16A 250V
42	3319501	SWITCH PROTECTION CAP
80	3319468	BLACK SINGLE POLE SWITCH 16A 250V

SPIN 12-1EVO

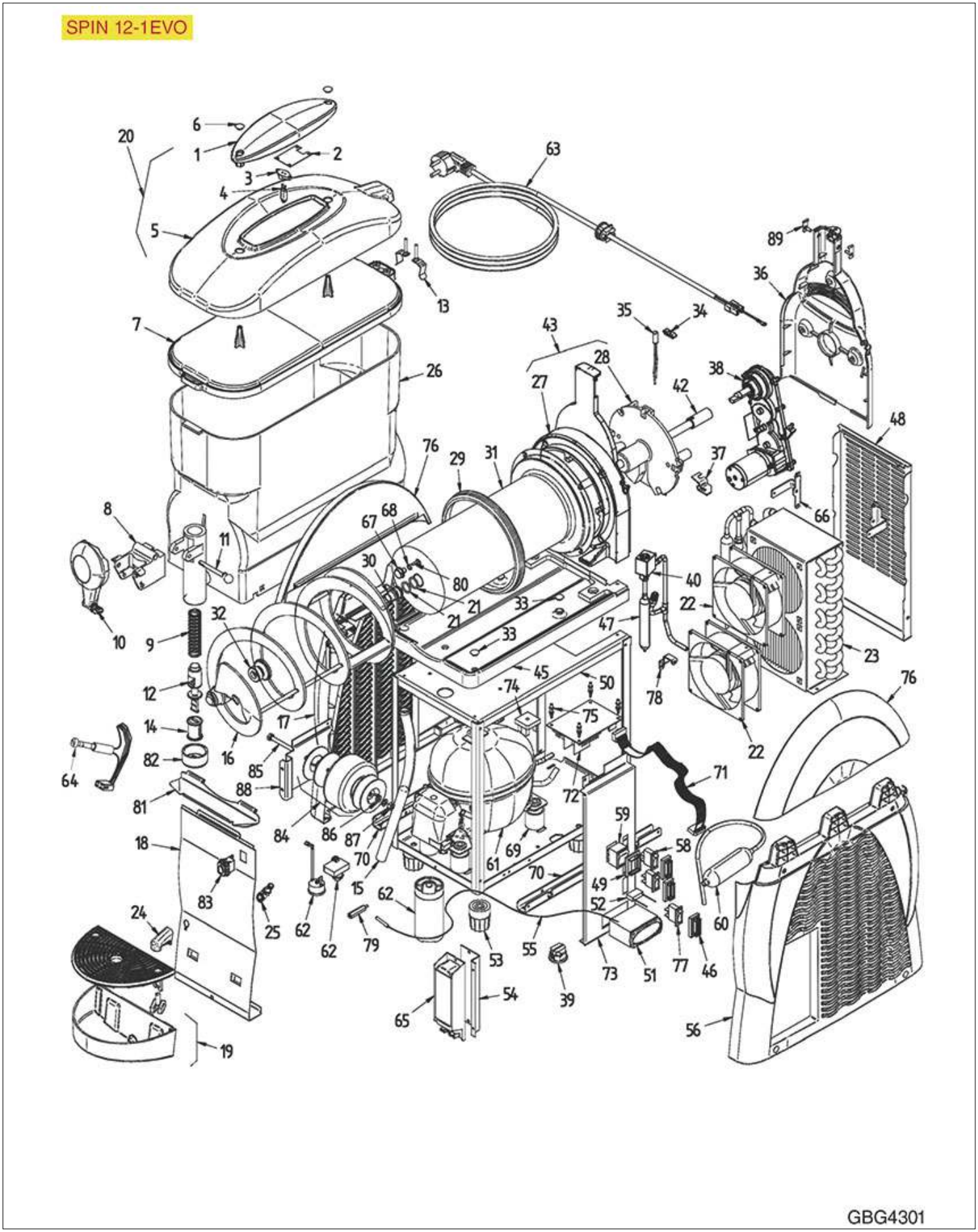

Positions without LF code no.: upon request

GBG

Position	LF code no.	Description
4	3221250	NEUTRAL HALOGEN LAMP G4 10W 12V
8	1199502	TAP SUPPORT
9	1250700	SPRING FOR TAP
11	1199504	TAP SPINDLE
12	1357027	DISPENSER TAP PISTON
14	1786239	GASKET FOR DISPENSER TAP
16	1199508	SCROLL GRANITA MACHINE
21	1786238	ORM GASKET 0015-20 RED SILICONE
22	3240501	AXIAL VENTILATOR SUNON 120x120x38 mm
29	1199322	EVAPORATOR GASKET ø 170 mm
30	1704003	BUSHING FOR GRANITA MACHINE SCROLL
32	1786240	GASKET FOR GRANITA MACHINE SCROLL
40	1199316	COIL CEME B4 230V 50 Hz
42	1199518	SHAFT COUPLING WITH BUSHING
49	3319501	SWITCH PROTECTION CAP
53	1313300	SUPPORTING FOOT H=40 mm
55	1397055	TEMPERATURE PROBE
58	3319468	BLACK SINGLE POLE SWITCH 16A 250V
59	1319202	GREEN TWO-POLE SWITCH 16A 250V

DRINK MAGIC 12-1

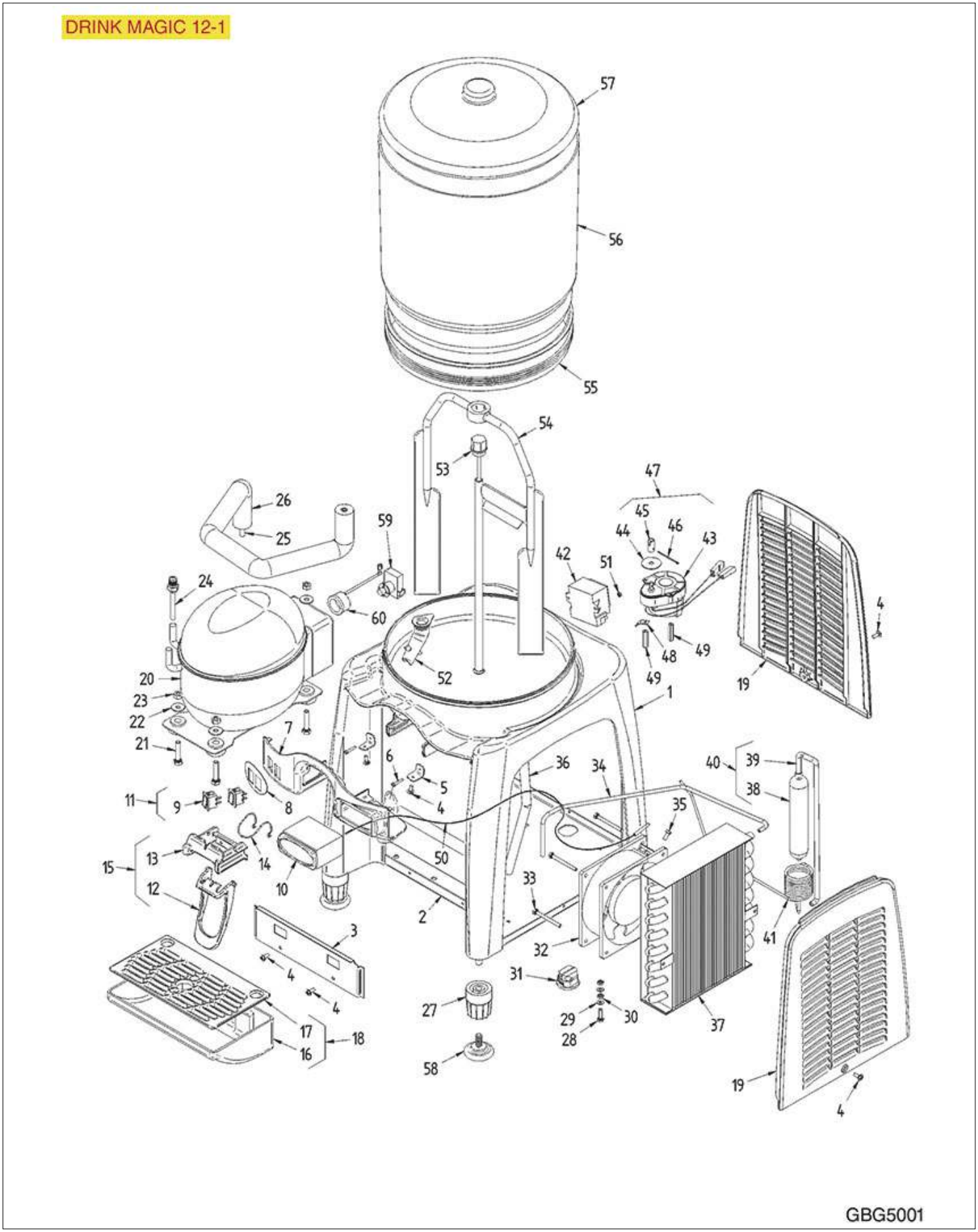

Positions without LF code no.: upon request

GBG

Position	LF code no.	Description
9	1199343	BLACK SINGLE-POLE SWITCH 6A 250V
27	1313300	SUPPORTING FOOT H=40 mm
32	3240501	AXIAL VENTILATOR SUNON 120x120x38 mm
43	1240304	GEAR MOTOR CROUZET 82334986
50	1397055	TEMPERATURE PROBE
58	1199312	RUBBER FOOT CE-3326 M8x20

MINILUX

MINILUX

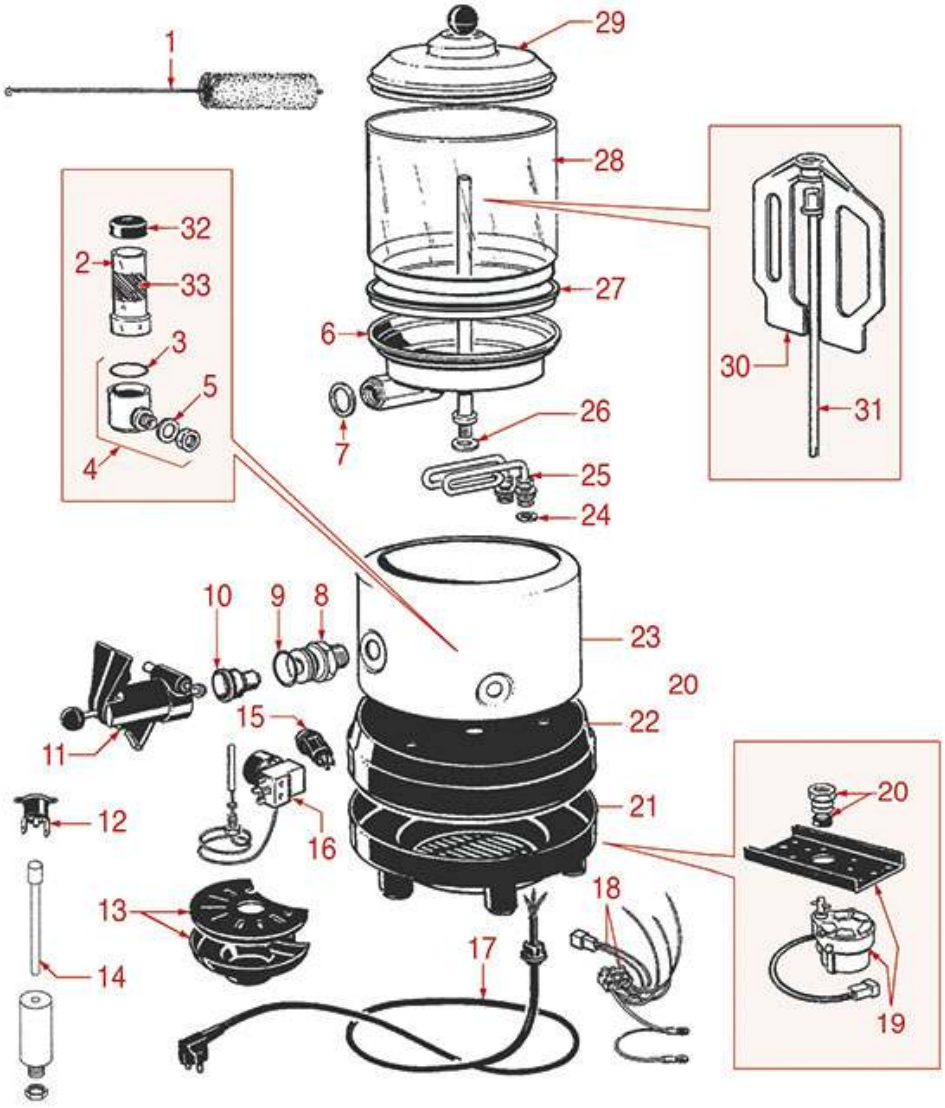

GBG6001

Positions without LF code no.: upon request

GBG

Position	LF code no.	Description
1	1197008	CLEANING BRUSH FOR CHOCOLATE POT
2	1197001	WATER LEVEL PIPE MINI/GRAN LUX
3	1186010	O-RING 04125 SILICONE RED
4	1197006	COMPLETE WATER LEVEL GAUGE BASE
9	1186009	O-RING 04081 RED SILICONE
10	1186011	RUBBER PIECE FOR TAP
11	1348100	COMPLETE TAP
13	1197004	COMPLETE TANK
15	3319928	GREEN BIPOLAR SWITCH 16A 250V
16	1444201	THERMOSTAT TR2 0+120°C
19	1240111	COMPLETE MIXER MOTOR 220V 50Hz
19	1240112	COMPLETE MIXER MOTOR 115V 60Hz
20	1197005	FITTING FOR TANK LOCKING
25	1755500	HEATING ELEMENT 1000W 220V
25	1755501	HEATING ELEMENT 1000W 115V 60Hz
27	1197010	TANK GASKET FOR GRANITA MACHINE
28	1197002	TANK MINILUX
30	1197011	LONG MINILUX MIXER
32	1197003	WATER LEVEL PIPE COVER
33	1197007	LEVEL LABEL MIN/MAX

GRANLUX

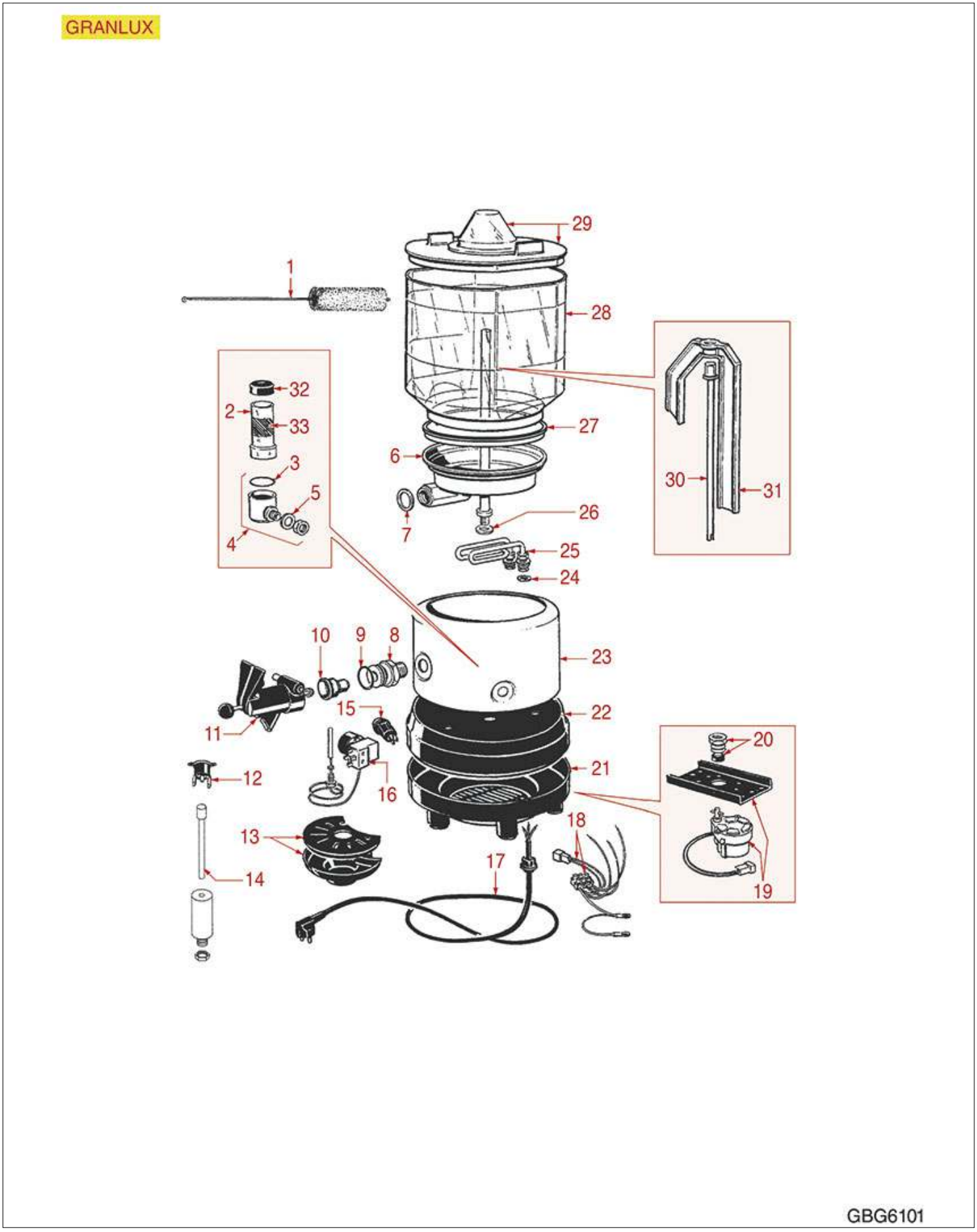

Positions without LF code no.: upon request

GBG

Position	LF code no.	Description
1	1197008	CLEANING BRUSH FOR CHOCOLATE POT
2	1197001	WATER LEVEL PIPE MINI/GRAN LUX
3	1186010	O-RING 04125 SILICONE RED
4	1197006	COMPLETE WATER LEVEL GAUGE BASE
9	1186009	O-RING 04081 RED SILICONE
10	1186011	RUBBER PIECE FOR TAP
11	1348100	COMPLETE TAP
13	1197004	COMPLETE TANK
15	3319928	GREEN BIPOLAR SWITCH 16A 250V
16	1444201	THERMOSTAT TR2 0+120°C
19	1240111	COMPLETE MIXER MOTOR 220V 50Hz
19	1240112	COMPLETE MIXER MOTOR 115V 60Hz
20	1197005	FITTING FOR TANK LOCKING
25	1755500	HEATING ELEMENT 1000W 220V
25	1755501	HEATING ELEMENT 1000W 115V 60Hz
27	1197010	TANK GASKET FOR GRANITA MACHINE
28	1197009	GRANLUX TANK
32	1197003	WATER LEVEL PIPE COVER
33	1197007	LEVEL LABEL MIN/MAX

MARTINA

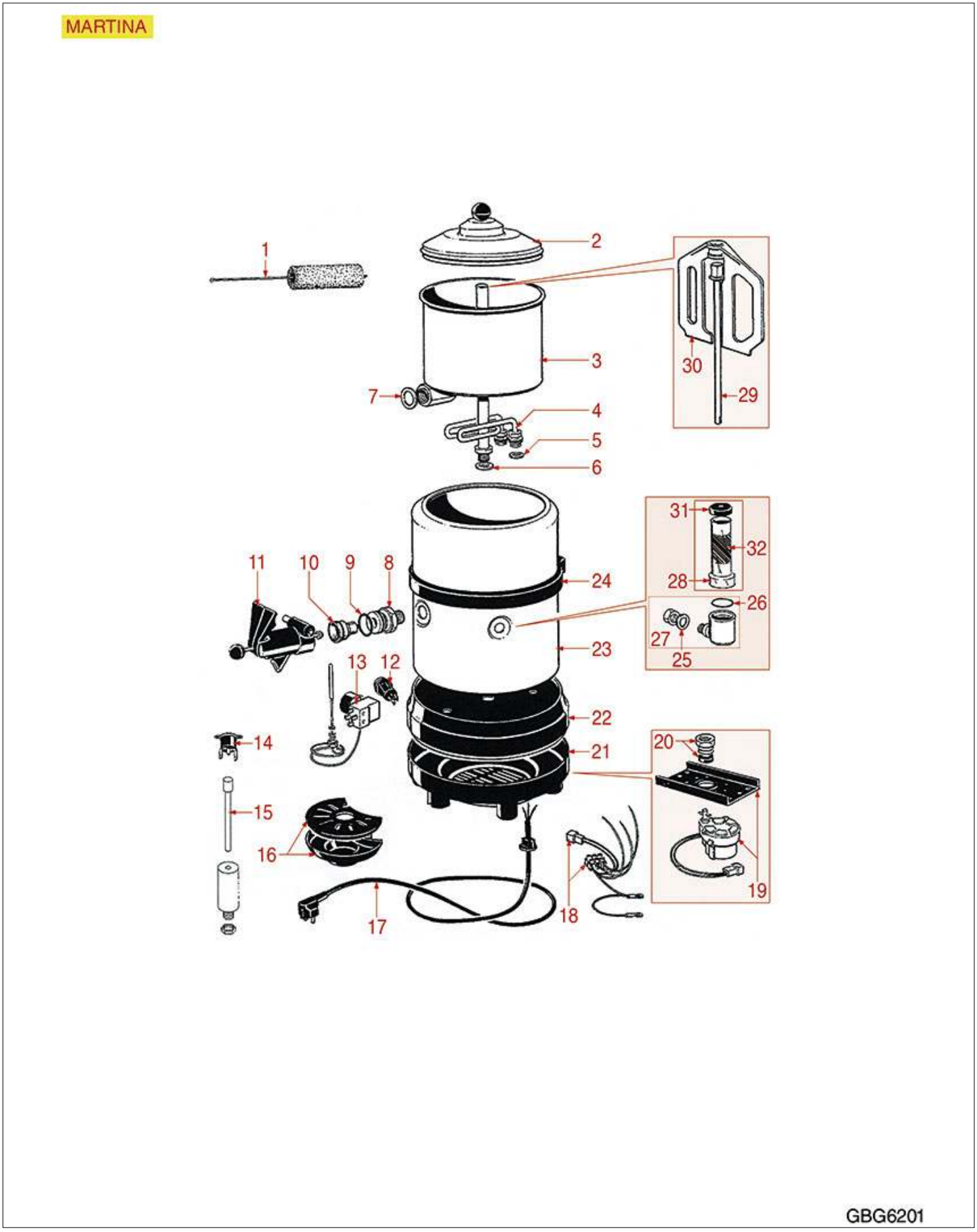

Positions without LF code no.: upon request

GBG

Position	LF code no.	Description
1	1197008	CLEANING BRUSH FOR CHOCOLATE POT
4	1755500	HEATING ELEMENT 1000W 220V
4	1755501	HEATING ELEMENT 1000W 115V 60Hz
9	1186009	O-RING 04081 RED SILICONE
10	1186011	RUBBER PIECE FOR TAP
11	1348100	COMPLETE TAP
12	3319928	GREEN BIPOLAR SWITCH 16A 250V
13	1444201	THERMOSTAT TR2 0+120°C
16	1197004	COMPLETE TANK
19	1240111	COMPLETE MIXER MOTOR 220V 50Hz
19	1240112	COMPLETE MIXER MOTOR 115V 60Hz
20	1197005	FITTING FOR TANK LOCKING
26	1186010	O-RING 04125 SILICONE RED
27	1197006	COMPLETE WATER LEVEL GAUGE BASE
28	1197000	WATER LEVEL PIPE MARTINA
31	1197003	WATER LEVEL PIPE COVER

CHOCOLADY 5/10

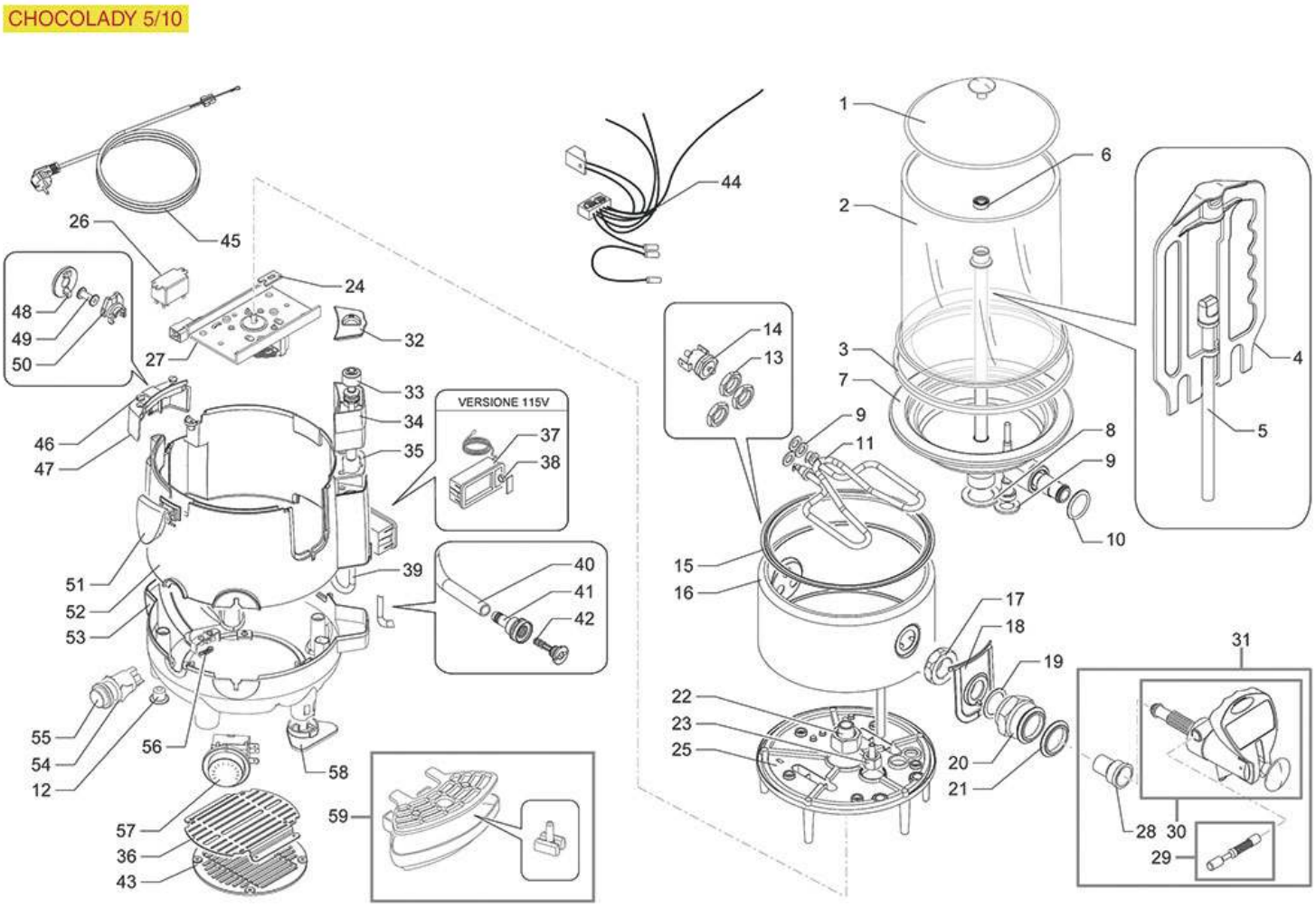

Positions without LF code no.: upon request

GBG

Position	LF code no.	Description
3	1197010	TANK GASKET FOR GRANITA MACHINE
4	1300001	MIXER BLADE FOR CHOCOLATE MAKER
12	1199342	TAP CAP
27	1240111	COMPLETE MIXER MOTOR 220V 50Hz
27	1240112	COMPLETE MIXER MOTOR 115V 60Hz
28	1186011	RUBBER PIECE FOR TAP
39	1449289	SILICONE HOSE ø 10x13 SHORE 60 - 100 m
39	1449689	SILICONE HOSE ø 10x13 SHORE 60 - 10 m
40	1449286	SILICONE HOSE ø 6x12 SHORE 60 - 100 m
40	1449686	SILICONE HOSE ø 6x12 SHORE 60 - 10 m

GBG

Suitable for:

Suitable for:

Adhesive labels

1197007 LEVEL LABEL MIN/MAX

GBG SL300002759

Belts

1198216 TRANSMISSION BELT

GBG SL300002962

Bodies

1199543 GLASS BOTTLE FOR GRANIMIX

GBG SL300009095

1199119 GRANITA MACHINE SIDE 310x106 mm

GBG SL3GS36006B

Bushes

1704003 BUSHING FOR GRANITA MACHINE SCROLL

GBG SL320002598

1199335 EVAPORATOR BUSHING

GBG SL3GS12033A GBG SL300950318 GBG SL340001650

Circlips

1199323 ST.STEEL RETAINER RING A-12 UNI 7435

GBG SL300006076 GBG SL300950254

GBG

Suitable for:

Suitable for:

Compressors

3070030 **COMPRESSOR NE2125GK CSIR LBP R404a**
power 1/3 Hp, displacement 8.78 cc
220/240V 50Hz
ASPERA

GBG SL37ZH02125

Digital electronic thermostats & probes

5051728 **DISPLAY GICAR 9.3.00.58G00**
12Vac/dc
3 inlet NTC probes (not included)

GBG SL310002791

Dispenser taps and accessories

1357025 **BLACK TAP CONTROL LEVER**
for Granita machine (GBG) GRANISHERBET - GRANISTAR

GBG SL3GS12040D GBG SL3GS12086C

1198206 **BUSHING FOR TAP**

GBG SL300000819

1199541 **COMPLETE PUMP**

GBG SL3MS8MK28A

1348100 **COMPLETE TAP**

GBG SL300002788

1199503 **DARK BLUE LEVER TAP**

GBG SL320000043

1357026 **DELIVERY TAP CLASP**

GBG SL3GS12043D

GBG

Suitable for:

1357027 DISPENSER TAP PISTON

GBG SL310001367 GBG SL320001629

1199505 TAP BODY

GBG SL3GS12042D

1198202 TAP HANDLE

GBG SL3SM12017A

1199338 TAP LEVER

GBG SL300950752

1199351 TAP REDUCER

GBG SL300950475

1199502 TAP SUPPORT

GBG SL3GS82013A

Suitable for:

1199350 SPINDLE FOR TAP LEVER

GBG SL3GS12043B GBG SL300950753 GBG SL300951293

1199342 TAP CAP

GBG SL3GS12044A GBG SL300950258

1199534 TAP HANDLE

GBG SL3GS12040B GBG SL3GS12086A

1198201 TAP LEVER SUPPORT

GBG SL300002239

1199504 TAP SPINDLE

GBG SL3GS82015A GBG SL300950010 GBG SL310000367

Suitable for:

Suitable for:

Drain hoses

1199507 PIPE FOR CONDENSATE OUTLET

GBG SL320000054

Drip tanks

1521004 BLACK LID FOR GRANITA MACHINE TANK
dimensions 340x180 mm

GBG SL320000874

1199544 BLUE LID

GBG SL3GS83009B

1199514 CLIP FOR TANK HOOKING

GBG SL3GS24008A

1199510 COMPLETE LID - DARK BLUE

GBG SL340000016 GBG SL340000696

1197009 GRANLUX TANK

GBG SL320000127

1199523 MIXER TANK

GBG SL300009142

1198046 RECTANGULAR TANK 6 L

GBG SL300002963

1198214 SQUARE TANK 7 L

GBG SL3SM07010A

1197002 TANK MINILUX
new type

GBG SL320000139 GBG SL32000759

1199328 TANK WITH TAP

GBG SL300970001 GBG SL310000629

GBG

Suitable for:

1199512 TANK WITH UL LOCKING SYSTEM 12 l

GBG SL320000002 GBG SL320000003 GBG SL340000538
GBG SL340000539

Suitable for:

1198211 TANK 12 l

GBG SL300004528

1199337 TANK 2002

GBG SL300950003

1521003 TANK 5 L FOR GRANITA MACHINE

GBG SL340000541

1199547 TANK 8 L

GBG SL320000004 GBG SL340000540

1199545 TRANSPARENT LID UL

GBG SL3GS36009B GBG SL300950359

1199501 TRANSPARENT UNDERLID

GBG SL3GS36009C GBG SL3GS83009N GBG SL320000989

Drip trays for coffee and bar

1015041 BLACK DRIP TANK

GBG SL340000502

1199509 COMPLETE DRIP TRAY - DARK BLUE

GBG SL340000017

1199546 COMPLETE DRIP TRAY BLUE

GBG SL340000032

1197004 COMPLETE TANK

GBG SL300002799+... GBG SL300099002

GBG

Suitable for:

1199305 DRIP TRAY

GBG SL300950751

Suitable for:

1199345 DRIP TRAY
with rear hooks

GBG SL300950014

1199304 DRIP TRAY GRID

GBG SL300950750

1199344 DRIP TRAY GRID

GBG SL30095031

1199533 DRIP TRAY GRID GM8/2V

GBG SL3GS36024A

1199531 DRIP TRAY GRID MS/4-GM/4

GBG SL300009078

1199532 DRIP TRAY GRID MS/8-GM/8

GBG SL3GS24024A

1199528 DRIP TRAY MS/4-GM/4

GBG SL300009025

1199529 DRIP TRAY MS/8-GM/8

GBG SL3GS24023A

1198215 PLASTIC TRAY WITH GRID

GBG SL3SM12657A

Electrical sockets

1199306 LIGHT SWITCH BASE

GBG SL3GS12078A GBG SL300991881

GBG

Suitable for:

Suitable for:

Energy regulators

1526501 SPEED REGULATOR 50÷300W 230V

GBG SL38TAB712R

Feet

1313304 RUBBER FOOT

GBG SL300004569

1199312 RUBBER FOOT CE-3326 M8x20

GBG SL300350856

1313301 SUPPORTING FOOT H=100 mm UL

GBG SL3MS4M006B

1313300 SUPPORTING FOOT H=40 mm

GBG SL300002388 GBG SL300950329 GBG SL300951357

Fittings

1197005 FITTING FOR TANK LOCKING

GBG SL300099007

Gaskets and seals

1199322 EVAPORATOR GASKET ø 170 mm

new type

GBG SL3GS36007B GBG SL3G536007B GBG SL30006016
GBG SL300950070

1186003 FLANGE GASKET FOR FAN MOTOR

GBG SL300002887

GBG

Suitable for:

1786239 GASKET FOR DISPENSER TAP

GBG SL320001758 GBG SL320001759

Suitable for:

1786240 GASKET FOR GRANITA MACHINE SCROLL

GBG SL310003830

1186007 GASKET FOR 7/12 L TANK

GBG SL300000122 GBG SL300004587

1186012 O-RING FOR TANK - WHITE ø 190 mm

old type

GBG SL300006016

3243069 O-RING OR 02068 EPDM

GBG SL300000818

1186745 O-RING 0115 RED SILICONE

GBG SL300000815

1186000 O-RING 0123 RED SILICONE

GBG SL3GS24044B

1186846 O-RING 02012 RED SILICONE

GBG SL330000264

1186850 O-RING 03068 RED SILICONE

GBG SL3GS4044B GBG SL300950194

1186009 O-RING 04081 RED SILICONE

GBG SL300000118

1186010 O-RING 04125 SILICONE RED

GBG SL300002705

1786238 ORM GASKET 0015-20 RED SILICONE

GBG SL310001843

GBG

Suitable for:

1186011 RUBBER PIECE FOR TAP

GBG SL300002779

Suitable for:

1186539 SILICONE OIL SEAL UNIT

GBG SL33VA12195

1186002 SUCTION GASKET FOR SCRAPER HOOKING

GBG SL300951857

1186530 TANK GASKET

GBG SL300002901

1197010 TANK GASKET FOR GRANITA MACHINE

new type
used for adapting new type tanks
to new type chocolate makers

GBG SL300500133 GBG SL320000107

Greases

1180000 VASELINE WHITE 30 g

GBG IC743000115 GBG SL39ZYTB030

Heating elements

1755501 HEATING ELEMENT 1000W 115V 60Hz

GBG SL340000069 GBG SL36000/110+...

1755500 HEATING ELEMENT 1000W 220V

GBG SL300099004

GBG

Suitable for:

Suitable for:

Inlet hoses

3090734 **PVC HOSE ø 5x8 mm - 10 m**
food-safe

GBG SL300009105

3090234 **PVC HOSE ø 5x8 mm - 100 m**
food-safe

GBG SL300009105

3090234 **PVC HOSE ø 5x8 mm - 100 m**
food-safe

GBG SL300009105

Ironmongery (screws,nuts,washers)

1198204 **FIBRE WASHER**

GBG SL300000979

1198207 **FIXING NUT FOR TAP BUSHING**

GBG SL300000821

1198205 **HEXAGONAL NUT FOR SPINDLE FIXING**

GBG SL300000956

Lamps

1199308 **GREEN INDICATOR LIGHT 230V**
head ø 7 mm - hole ø 6 mm

GBG SL300993613

1199327 **LAMP 21W 12V**

GBG SL300950100

3221250 **NEUTRAL HALOGEN LAMP G4 10W 12V**
for OVEN

GBG SL38LA10WG4

Level gauges

1197006 **COMPLETE WATER LEVEL GAUGE BASE**

GBG SL300099008 GBG SL340000111

1197003 **WATER LEVEL PIPE COVER**

GBG SL300006022

1197000 **WATER LEVEL PIPE MARTINA**

GBG SL3CHMT031B GBG SL300002733

1197001 **WATER LEVEL PIPE MINI/GRAN LUX**

GBG SL300006007 GBG SL340000112

Microswitches

1199309 **MICROSWITCH 5A 250V**

GBG SL300950587 GBG SL340000183

Motors

3240501 **AXIAL VENTILATOR SUNON 120x120x38 mm**
ball bearings
22W 230V 50/60Hz 2850 Rpm
DP200A 2123XBT.GN
for Granita machine (UGOLINI) MINIGEL - MTMINI

GBG SL300350188 GBG SL37TAH0401

1240109 **BLENDER MOTOR K50305 230V 50Hz**
for Granita machine (GBG) GRANMIX GM8
MULTISTAR MS8

GBG SL300009140

GBG

Suitable for:

1240112 COMPLETE MIXER MOTOR 115V 60Hz

GBG SL3CHML740B

Suitable for:

1240111 COMPLETE MIXER MOTOR 220V 50Hz

GBG SL3CHML740A GBG SL310005993 GBG SL340001639

1240110 FLANGE FOR BLENDER MOTOR

GBG SL3MS/4050A

1240304 GEAR MOTOR CROUZET 82334986

230V 50Hz 30rpm 3,5W
for Frigo drink (GBG) DRINK MAGIC

GBG SL300352121 GBG SL310000518

1240201 GEAR MOTOR KENTA K9357505B

for first series

GBG SL3MS4M015C

1240301 GEARMOTOR ELCO FR10-40-33 216

115/230V 50/60Hz 70W 32rpm

GBG SL3MS4M015C GBG SL300950212

5035146 GEARMOTOR KENTA K9357511

230V 50Hz 58W 33rpm
for Granita machine (GBG) GRANISMART

GBG SL310001422 GBG SL310005299

1198208 MAGNETIC IMPELLER 4 PADDLES

GBG SL3SM12739A GBG SL300001020

1198209 MAGNETIC IMPELLER 8 PADDLES

GBG SL300002841

5023964 MOTOR ELCO 16W VNT 16-25/0/1

230V 50/60Hz 65W Input 1300rpm

GBG SL340000075

1198218 MAGNETIC TRANSMISSION PULLEY

GBG SL300002943

GBG

Suitable for:

1198216 TRANSMISSION BELT

GBG SL300002962

Suitable for:

1240021 MOTOR EMI 10W 82B-2010/01
230V 50/60Hz 45W Input 1300rpm
for Frigo drink (GBG) SMALL MAGIC

GBG SL3SM07835A

1240104 MOTOR FAN 16W 230V 50/60Hz

GBG SL300009177

1240106 MOTOR FAN 25W 230V 50/60Hz

GBG SL37THL0/46

3240563 MOTOR VENTILATOR EBM 127x127x38 mm
5958 - 230V 50/60Hz 18W
ball bearings

GBG SL330000173

1199520 RETAINER FOR GEAR MOTOR

GBG SL320000007 GBG SL320000370

3240964 SUCTION BLADE ø 250 mm 28°

GBG SL300000233

Paddles

1197011 LONG MINILUX MIXER

GBG SL300006017

1300001 MIXER BLADE FOR CHOCOLATE MAKER

GBG SL320001793

1198045 SMALL COVER FOR IMPELLER

GBG SL300002934

1199521 STIRRING WHEEL

GBG SL300002847

GBG

Suitable for:

Suitable for:

Pins

1198203 HEXAGONAL SPINDLE

GBG SL300000980

1199516 PIN FOR DENSITY ADJUSTMENT

GBG SL3GS12035A GBG SL300950079

1199515 RETAINER FOR DENSITY ADJUSTMENT

GBG SL3GS12036A

1199518 SHAFT COUPLING WITH BUSHING

GBG SL3GS12030A GBG SL3GS12031A GBG SL300950321
GBG SL310002030

1198200 STAINLESS STEEL TAP SPINDLE

GBG SL300000817

Probes

1397055 TEMPERATURE PROBE

bulb ø 5x20 mm - cable length 118 mm

GBG SL310002736 GBG SL310002831 GBG SL310007281

Pull-through brushes

1197008 CLEANING BRUSH FOR CHOCOLATE POT

GBG SL300001474

GBG

Suitable for:

Suitable for:

Pulleys

1198218 MAGNETIC TRANSMISSION PULLEY

GBG SL300002943

Rating-plates

1199500 TRANSPARENT LABEL GRANITA MACH.GRANITIME

GBG SL320000040

Scrolls

1719060 GRANITA MACHINE SCROLL ø 147x248 mm

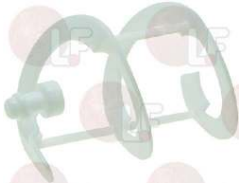

GBG SL320000795

1199320 NEW SCROLL ADAPTER KIT

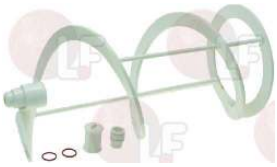

GBG SL300970382 GBG SL310001772 GBG SL310001772+
GBG SL310005008

1199508 SCROLL GRANITA MACHINE

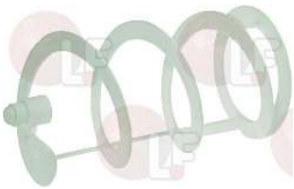

GBG SL3GS12009D GBG SL3G512009D GBG SL300950224

1199329 SPIRAL STIRRING BLADE

GBG SL300970005

Solenoid valves

1199316 COIL CEME B4 230V 50 Hz

GBG SL300951342 GBG SL38EAE48GL

1120362 COIL PARKER WB4.5 6W 220/230V 50/60Hz

length 22 mm - height 30,5 mm
depth 32,5 mm

GBG SL38EAA44GL

GBG

Suitable for:

1120336 **COIL PARKER ZB09 9W 110/120V 50/60Hz**
width 34 mm - height 33 mm
depth 43 mm

GBG SL30210/110

Suitable for:

3120032 **COIL PARKER ZB09 9W 220/240V 50/60Hz**
width 34 mm - height 33 mm
depth 43 mm

GBG SL300000210

1199317 **DOUBLE SOLENOID VALVE BODY CEME**

GBG SL300970159

1120602 **SOLENOID VALVE CEME 5935 3-WAY**
230V 50/60Hz
tubes ø 5 mm - orifice 1.5 mm

GBG SL3GS36711A GBG SL3GS36711B

1120603 **SOLENOID VALVE M&M 246DSQ0G**
Coil 24V 10VA 50/60Hz
thread fitting 1/4" LH hole - closed hole RH
with standard flow rate regulation screw
silicone gasket
nominal ø 7.5 mm

GBG SL300001375

1120253 **2-WAY SOLENOID VALVE CEME**
230V 50/60Hz
tubes ø 5 mm - orifice 1.5 mm

GBG SL3GS24711A GBG SL3GS24711B GBG SL300951230

Springs

1250701 **SPRING FOR DENSITY ADJUSTMENT**

GBG SL3GS12038A

1250700 **SPRING FOR TAP**

GBG SL3GS82014A GBG SL320001401

1199311 **SPRING GUIDE FOR ADJUSTMENT SYSTEM**

GBG SL3GS12037B GBG SL300950073

1199333 **TAP SPRING**

GBG SL300970040

Suitable for:

Suitable for:

1199339 TAP SPRING

GBG SL3GS12041A GBG SL300950167 GBG SL310001565

Switches

1319206 BLACK BIPOLAR SWITCH 16A 250V
with green led indicator light
temperature max 120°C
mounting hole 13x35 mm

GBG SL38AAV80AV

1319207 BLACK BIPOLAR SWITCH 16A 250V
with orange led indicator light
temperature max 125°C
mounting hole 12x35 mm

GBG SL38AAV80AA

3319468 BLACK SINGLE POLE SWITCH 16A 250V
silk-screen printing 0 - I
max temperature 120°C
mounting hole 11x30 mm
for CAB FAST COLD 1-2-3/NEW FABY 1-2-3
for COFRIMELL FRIGO DRINK COF-COLDREAM-JETCOF-MEGA25-MEGA40-NEWCOF
for Frigo drink (COFRIMELL) COF - COLDREAM
JETCOF - MEGA25 - MEGA40 - NEWCOF
for Granita machine (CAB) FAST COLD1 - FAST COLD2
FAST COLD3 - NEW FABY1 - NEW FABY2 - NEW FABY3

GBG SL300000964 GBG SL300951088 GBG SL330000209

1199343 BLACK SINGLE-POLE SWITCH 6A 250V
silk-screen printing 0 - I
temperature max 120°C
mounting hole 13x20 mm

GBG SL300950567

1199303 BLACK THREE-POLE SWITCH 16A 250V
silk-screen printing II - 0 - I
temperature max 120°C
mounting hole 11x30 mm

GBG SL300951089

1319205 BLUE MONOPOLAR SWITCH 16A 250V
with indicator light
silkscreen printing 0 - I
temperature max 120°C
mounting hole 11x30 mm

GBG SL38AC1130B

GBG

Suitable for:

Suitable for:

3319012 **GREEN BIPOLAR SWITCH 16A 250V**
with indicator light and switch cover
screen printing 0 - I
max temperature 120°C
mounting hole 22x30 mm

GBG SL330000208

3319928 **GREEN BIPOLAR SWITCH 16A 250V**
with indicator lamp
max.temperature 120°C
lmounting hole ø 25 mm

GBG SL38AGSPL1V

3319151 **SWITCH PROTECTION CAP**
ø external 34 mm
for push-buttons with mounting hole ø 25 mm

1319203 **GREEN MONOPOLAR SWITCH 16A 250V**
with indicator light
silkscreen printing 0 - I
temperature max 120°C
mounting hole 11x30 mm

GBG SL38AC1130V

1319202 **GREEN TWO-POLE SWITCH 16A 250V**
with indicator lamp
silk-screen printing 0 - I
temperature max 120°C
mounting hole 22x30 mm

GBG SL300003131

1319702 **ON-OFF-ON SELECTOR SWITCH**
16A 250V
max.temperature 120°C
mounting hole 22x30 mm.

GBG SL38AM2230N

1319204 **ORANGE MONOPOLAR SWITCH 16A 250V**
with indicator light
silkscreen printing 0 - I
temperature max 120°C
mounting hole 11x30 mm

GBG SL38AC1130A

Suitable for:

Suitable for:

3319501 **SWITCH PROTECTION CAP**
external dimensions 29x36 mm
for switches with mounting hole 22x30 mm

GBG SL330000096

Thermostats

1444106 **RANCO THERMOSTAT K50 L3100**
2 contacts 6A 250V
capillary 1000 mm
D-shaped pin ø 6x4.6 mm

GBG SL300372061

1444107 **THERMOSTAT RANCO K50 L3231**
2 contacts 6A 250V

GBG SL300350467 GBG SL37AAL3231

1444201 **THERMOSTAT TR2 0+120°C**
capillary 900 mm
bulb ø 6x95 mm

GBG SL300099001

Timers

1446500 **TIMER BIGATTI D94**
230V 50/60Hz 4 min

GBG SL3CL13014A GBG SL3GS12079A

1199300 **TIMER P215 1CAM 4 MINUTES**
230V 50/60Hz
for Granita machine (STAFF ICE SYSTEM) H10 - MH14

GBG SL300950565

Transformers

1199301 **TRANSFORMER 20VA 12/220V**

GBG SL300951431