Spare parts for:

Bar equipment

Suitable for:

UGOLINI

This catalogue is automatically generated.
Therefore, the sequence of the items might not be always shown at best.
Updates will be issued in case of additions and/or amendments.
*Suitable **universal spare parts** may not be included*

Rel. 2013-09130919

MINIGEL COUNTER BATCH-FREEZER

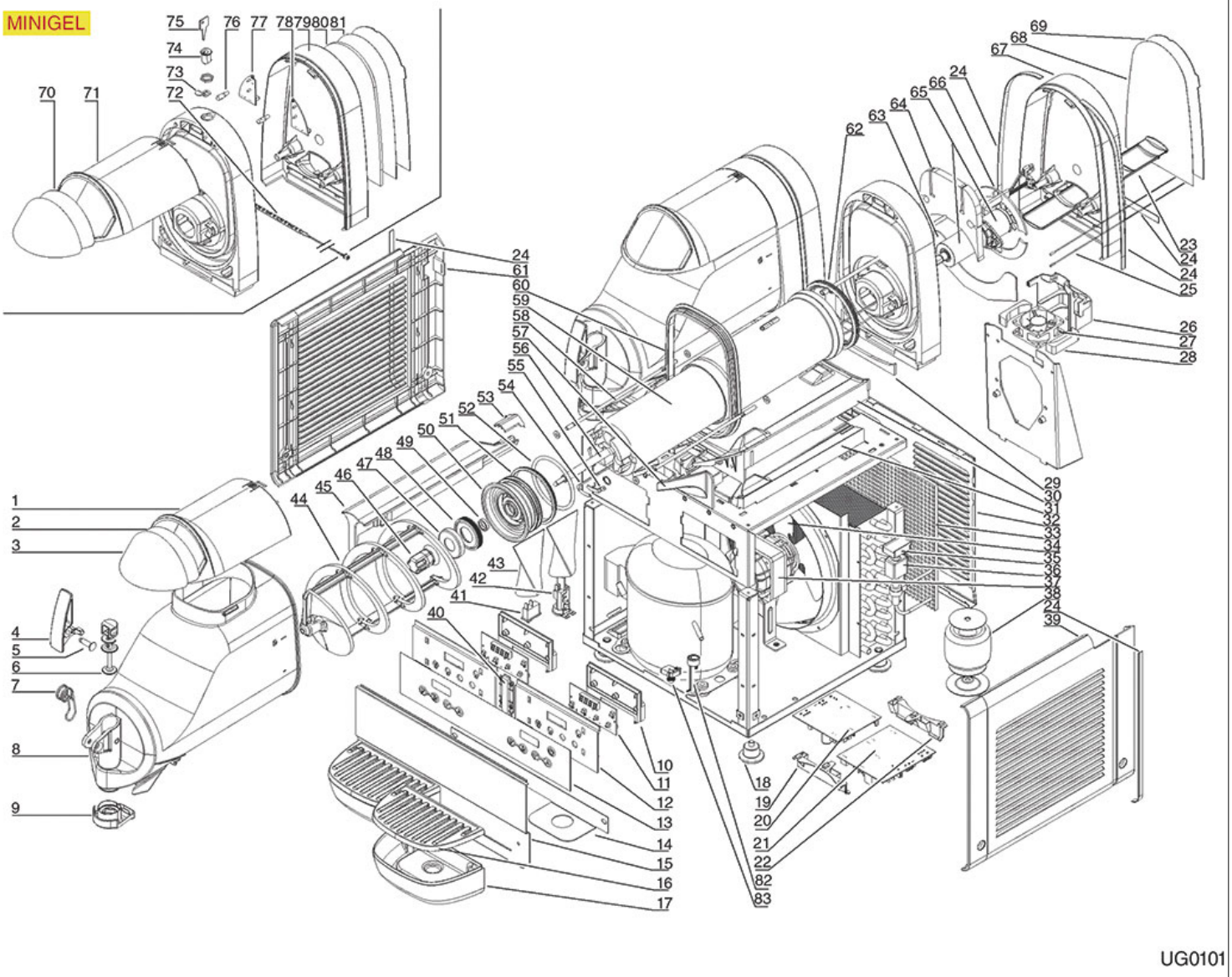

Positions without LF code no.: upon request

UGOLINI

Position	LF code no.	Description
4	1357040	TAP CONTROL LEVER
5	1357041	TAP CONTROL LEVER PIN
6	1357039	TAP PISTON
7	1250337	DISPENSER TAP SPRING
9	1357042	TAP FLOW REDUCER
18	1313029	FOOT ø 40 mm M8
27	1240174	AXIAL FAN 60x60x25 mm 24VDC
34	1240505	SPECIAL EXHAUST FAN ø 230 mm
37	3240501	AXIAL VENTILATOR SUNON 120x120x38 mm
41	1199042	WHITE SINGLE-POLE SWITCH 16A 250V
44	1719064	SOFT ICE SCROLL ø 139x310 mm
48	1786244	CAP GASKET ø 57x28x10 mm
49	1786247	RETAINER SPRING RING ø 20x11x5 mm
51	1786248	EVAPORATOR FRONT GASKET
52	1786246	O-RING 06337 RED SILICONE
54	1397056	TEMPERATURE PROBE
60	1786242	TANK GASKET
62	1786245	EVAPORATOR REAR GASKET

MT MINI GRANITA MACHINE

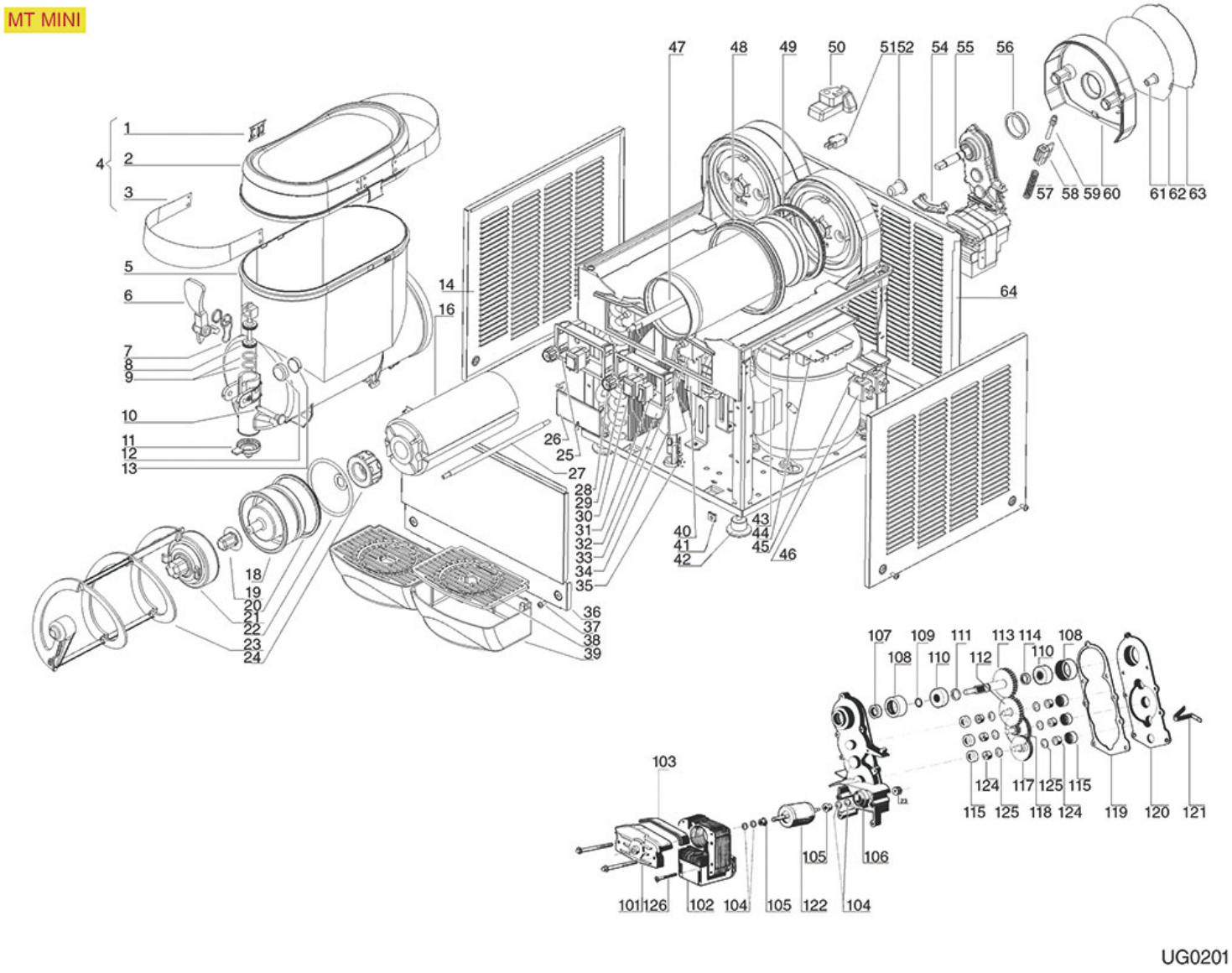

Positions without LF code no.: upon request

UGOLINI

Position	LF code no.	Description
5	1521006	GRANITA MACHINE TANK 6 L
6	1199113	RED TAP LEVER
7	1250336	DISPENSER TAP SPRING
8	1357037	DISPENSER TAP PISTON
9	1199001	O-RING 0123 WHITE SILICONE
10	1199040	RED PIN FOR TAP LEVER
11	1357038	TAP FLOW REDUCER
12	1199004	COMPLETE SKIMMING BUSHING
13	1199004	COMPLETE SKIMMING BUSHING
19	1704004	SCROLL BUSHING
20	1786248	EVAPORATOR FRONT GASKET
21	1240372	MAGNETIC ROTOR FOR SCROLL
22	1786246	O-RING 06337 RED SILICONE
23	1719062	GRANITA MACHINE SCROLL ø 140x300 mm 6 L
24	1199050	MAGNETIC ROTOR
28	1199053	KNOB FOR THERMOSTAT
30	1199027	WHITE THREE-POLE SWITCH 16A 250V
31	1199042	WHITE SINGLE-POLE SWITCH 16A 250V
32	1240505	SPECIAL EXHAUST FAN ø 230 mm
33	1199086	THERMOSTAT RANCO K50 L3212
38	1015046	DRIP TRAY GRID
39	1015044	GREY DRIPPING TRAY
40	1240371	MOTOR EMI 16W 82E-2516
40	3240501	AXIAL VENTILATOR SUNON 120x120x38 mm
42	1313029	FOOT ø 40 mm M8
44	1199150	ELECTRONIC DELAY SWITCH 230V 50Hz
48	1199005	GASKET
49	1786245	EVAPORATOR REAR GASKET
51	3240123	MICROSWITCH 16A 250V
52	1199028	GREY LOWER BUSHING
55	5025506	GEAR MOTOR 230V 50Hz
57	1199046	SPRING FOR DENSITY ADJUSTMENT
59	1199044	ZINC PLATED DENSITY ADJUSTING SCREW
101	1199017	BRACKET WITH BUSHING HT
101	1199025	COMPLETE BRIDGE OVER NEW MODEL
102	1199015	STATOR 230V 50Hz
104	1199018	WASHER FOR GEAR MOTOR
105	1199059	ROTOR SPACER FOR GEAR MOTOR
107	1786247	RETAINER SPRING RING ø 20x11x5 mm
108	1199060	BEARING CAP ø 28 mm
109	1186411	O-RING 02031 EPDM
110	1199062	BEARING 6001 2Z
111	1199063	SPACER 1.5 mm FOR GEAR MOTOR
112	1199064	THIRD GEARWHEEL FOR GEAR MOTOR
114	1199066	SPACER 3.3 mm FOR GEAR MOTOR
115	1199067	BUSHING CAP FOR GEARMOTOR
117	1199068	FIRST GEARWHEEL FOR GEAR MOTOR
118	1199069	SECOND GEARWHEEL FOR GEAR MOTOR
123	1199019	PINION FOR GEAR MOTOR
124	1199020	BUSHING FOR GEAR MOTOR
125	1199021	WASHER 4x8x0.2 mm FOR GEAR MOTOR

UGOLINI

MT GL GRANITA MACHINE

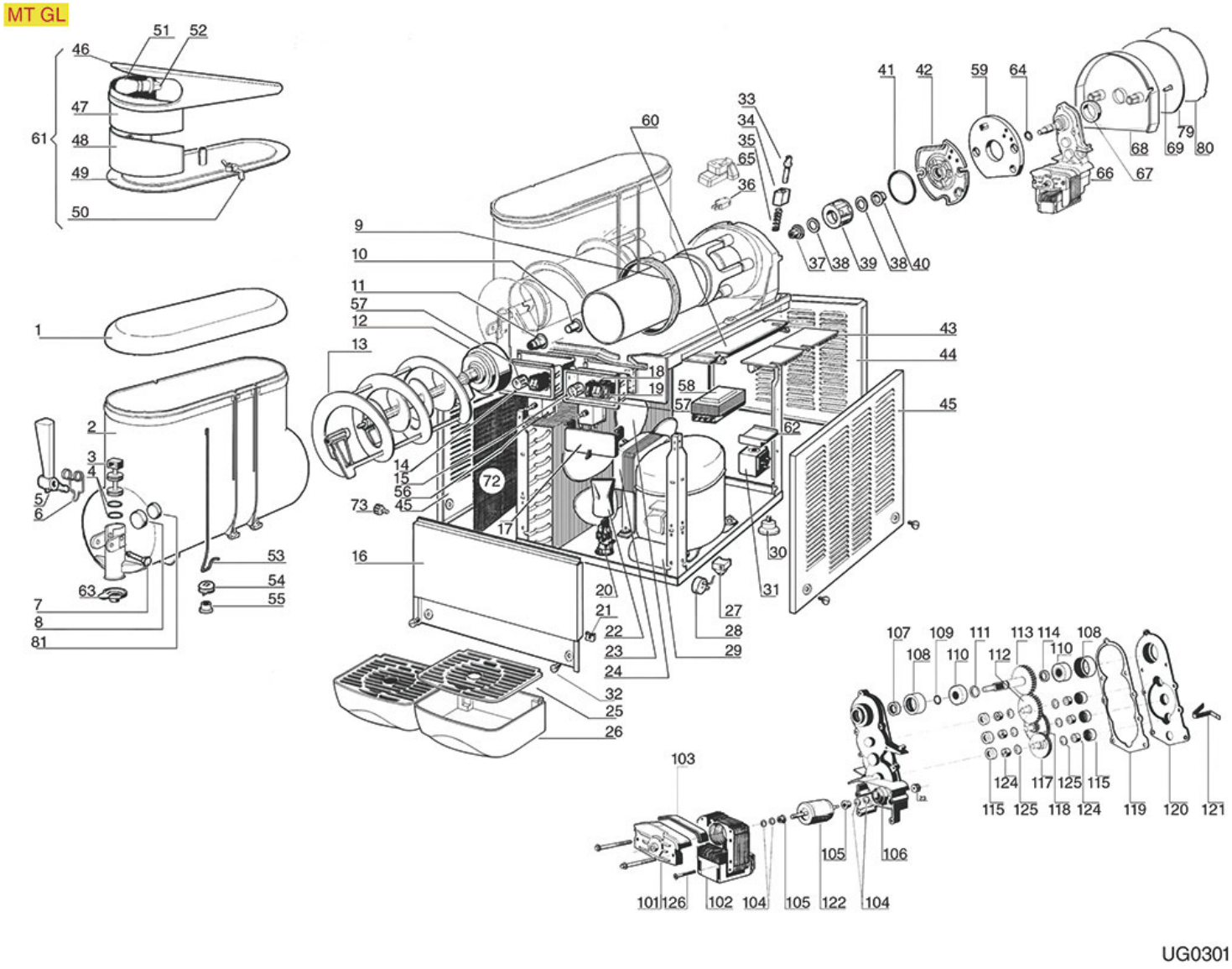

Positions without LF code no.: upon request

UGOLINI

Position	LF code no.	Description
1	1199038	TRANSPARENT COVER
2	1199030	CONTAINER FOR GRANITA MACHINE 10 l
3	1357037	DISPENSER TAP PISTON
4	1199001	O-RING 0123 WHITE SILICONE
5	1357035	TAP CONTROL LEVER
6	1250336	DISPENSER TAP SPRING
7	1199040	RED PIN FOR TAP LEVER
8	1199004	COMPLETE SKIMMING BUSHING
9	1199005	GASKET
10	1199006	BACK BUSHING
11	1199008	SCROLL BUSHING
12	1199041	INTERNAL MIXER
13	1199026	MAGNETIC EXTERNAL MIXER
18	1199027	WHITE THREE-POLE SWITCH 16A 250V
19	1199042	WHITE SINGLE-POLE SWITCH 16A 250V
23	1240371	MOTOR EMI 16W 82E-2516
24	1240505	SPECIAL EXHAUST FAN ø 230 mm
25	1015046	DRIP TRAY GRID
25	1199070	DRIP TRAY GRID
26	1015044	GREY DRIPPING TRAY
26	1015045	GREY DRIPPING TRAY
30	1313029	FOOT ø 40 mm M8
33	1199044	ZINC PLATED DENSITY ADJUSTING SCREW
35	1199046	SPRING FOR DENSITY ADJUSTMENT
36	3240123	MICROSWITCH 16A 250V
37	1199048	REAR BUSHING FOR GRANITA MACH. SHOULDER
38	1199049	WASHER FOR MAGNETIC MOTOR
39	1199050	MAGNETIC ROTOR
40	1199051	BUSHING FOR MOTOR SUPPORT FLANGE
41	1199075	O-RING 03231 RED SILICONE
43	1199033	ELECTRONIC DELAYER 115V 60Hz
48	1199032	PICTURE SCREEN
51	1221008	LAMP 28V
53	1199013	SPRING FOR LAMP CONTACT
54	1199023	RUBBER PIECE WITH LAMP CONTACT
56	1199052	MODIFIED THERMOSTAT RANCO K50 L3212
57	1199053	KNOB FOR THERMOSTAT
59	1199054	ANTI-CONDENSATE GASKET
63	1357038	TAP FLOW REDUCER
64	1186411	O-RING 02031 EPDM
66	1240500	GEAR MOTOR 115V 60Hz
66	1240501	GEAR MOTOR 230V 50Hz
72	1199131	FILTER FOR CONDENSER
81	1199004	COMPLETE SKIMMING BUSHING
101	1199017	BRACKET WITH BUSHING HT
101	1199025	COMPLETE BRIDGE OVER NEW MODEL
102	1199015	STATOR 230V 50Hz
104	1199018	WASHER FOR GEAR MOTOR
105	1199059	ROTOR SPACER FOR GEAR MOTOR
107	1786247	RETAINER SPRING RING ø 20x11x5 mm
108	1199060	BEARING CAP ø 28 mm
109	1186411	O-RING 02031 EPDM
110	1199062	BEARING 6001 2Z
111	1199063	SPACER 1.5 mm FOR GEAR MOTOR
112	1199064	THIRD GEARWHEEL FOR GEAR MOTOR
113	1199065	FOURTH GEARWHEEL FOR GEAR MOTOR
114	1199066	SPACER 3.3 mm FOR GEAR MOTOR
115	1199067	BUSHING CAP FOR GEARMOTOR
117	1199068	FIRST GEARWHEEL FOR GEAR MOTOR
118	1199069	SECOND GEARWHEEL FOR GEAR MOTOR
123	1199019	PINION FOR GEAR MOTOR
124	1199020	BUSHING FOR GEAR MOTOR
125	1199021	WASHER 4x8x0.2 mm FOR GEAR MOTOR

UGOLINI

GIANT GL GRANITA MACHINE

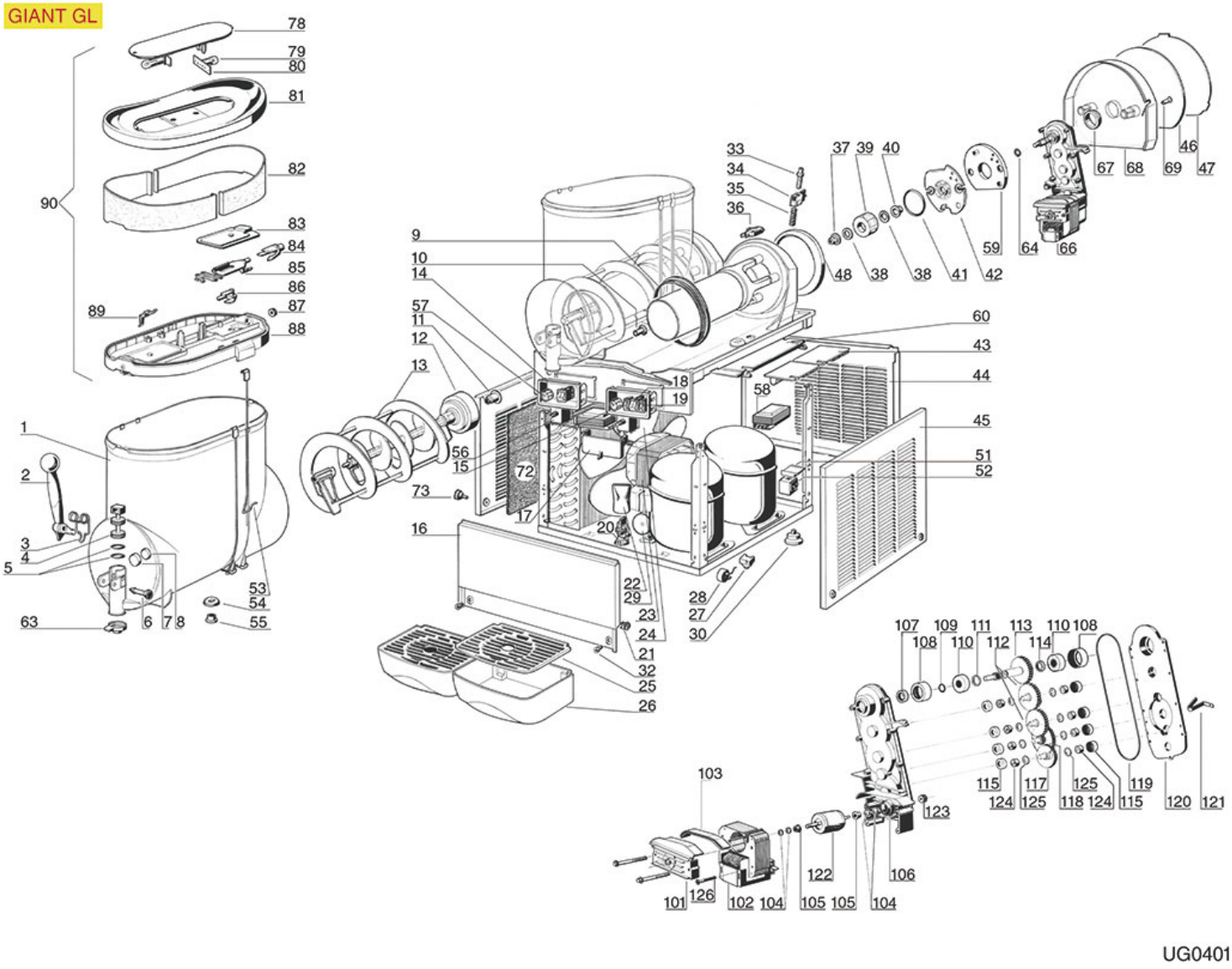

Positions without LF code no.: upon request

UGOLINI

Position	LF code no.	Description
1	1521007	GRANITA MACHINE TANK 15 L
2	1357034	TAP CONTROL LEVER
3	1250336	DISPENSER TAP SPRING
4	1357037	DISPENSER TAP PISTON
5	1199001	O-RING 0123 WHITE SILICONE
6	1199040	RED PIN FOR TAP LEVER
7	1199004	COMPLETE SKIMMING BUSHING
8	1199004	COMPLETE SKIMMING BUSHING
9	1786241	TANK GASKET 15L
10	1199006	BACK BUSHING
11	1199008	SCROLL BUSHING
12	1199041	INTERNAL MIXER
13	1719063	GRANITA MACHINE SCROLL ø 188x350 mm 15 L
18	1199027	WHITE THREE-POLE SWITCH 16A 250V
19	1199042	WHITE SINGLE-POLE SWITCH 16A 250V
30	1313029	FOOT ø 40 mm M8
33	1199044	ZINC PLATED DENSITY ADJUSTING SCREW
35	1199046	SPRING FOR DENSITY ADJUSTMENT
36	3240123	MICROSWITCH 16A 250V
37	1199048	REAR BUSHING FOR GRANITA MACH. SHOULDER
38	1199049	WASHER FOR MAGNETIC MOTOR
39	1199050	MAGNETIC ROTOR
40	1199051	BUSHING FOR MOTOR SUPPORT FLANGE
41	1199075	O-RING 03231 RED SILICONE
43	1199033	ELECTRONIC DELAYER 115V 60Hz
48	1786249	ANTI-CONDENSATE GASKET
53	1250335	LIGHT CONTACT SPRING
54	1199023	RUBBER PIECE WITH LAMP CONTACT
56	1199052	MODIFIED THERMOSTAT RANCO K50 L3212
57	1199053	KNOB FOR THERMOSTAT
59	1199054	ANTI-CONDENSATE GASKET
63	1357038	TAP FLOW REDUCER
64	1186411	O-RING 02031 EPDM
66	5029270	GEAR MOTOR 230V 50Hz
72	1160077	FILTER FOR CONDENSER
104	1199018	WASHER FOR GEAR MOTOR
105	1199059	ROTOR SPACER FOR GEAR MOTOR
107	1786247	RETAINER SPRING RING ø 20x11x5 mm
108	1199060	BEARING CAP ø 28 mm
109	1186411	O-RING 02031 EPDM
110	1199062	BEARING 6001 2Z
111	1199063	SPACER 1.5 mm FOR GEAR MOTOR
112	1199064	THIRD GEARWHEEL FOR GEAR MOTOR
114	1199066	SPACER 3.3 mm FOR GEAR MOTOR
115	1199067	BUSHING CAP FOR GEARMOTOR
117	1199068	FIRST GEARWHEEL FOR GEAR MOTOR
118	1199069	SECOND GEARWHEEL FOR GEAR MOTOR
123	1199019	PINION FOR GEAR MOTOR
124	1199020	BUSHING FOR GEAR MOTOR
125	1199021	WASHER 4x8x0.2 mm FOR GEAR MOTOR

IT GL/GLS GRANITA MACHINE

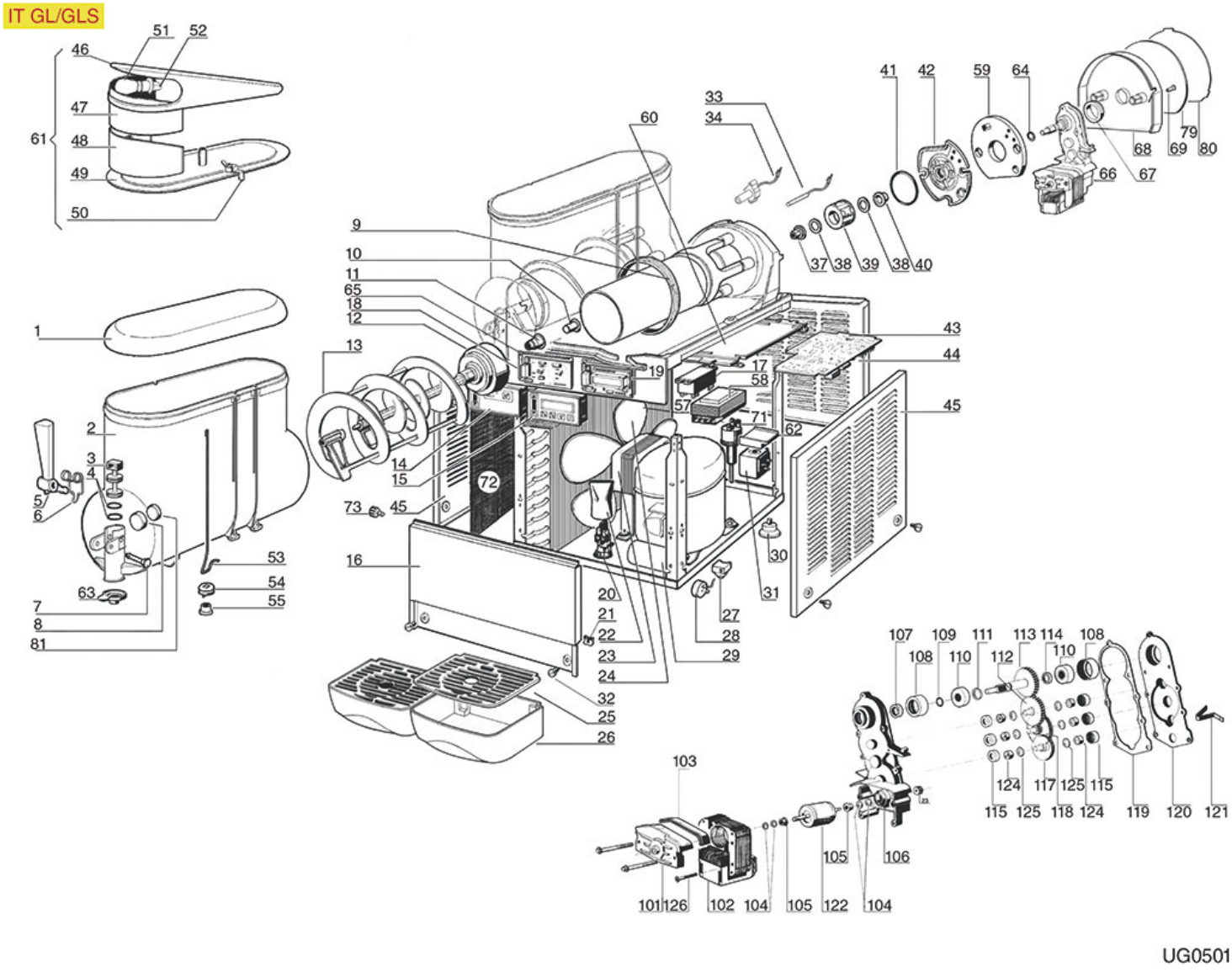

Positions without LF code no.: upon request

UGOLINI

Position	LF code no.	Description
1	1199038	TRANSPARENT COVER
2	1199030	CONTAINER FOR GRANITA MACHINE 10 l
3	1357037	DISPENSER TAP PISTON
4	1199001	O-RING 0123 WHITE SILICONE
5	1357035	TAP CONTROL LEVER
6	1250336	DISPENSER TAP SPRING
7	1199040	RED PIN FOR TAP LEVER
8	1199004	COMPLETE SKIMMING BUSHING
9	1199005	GASKET
10	1199006	BACK BUSHING
11	1199008	SCROLL BUSHING
12	1199041	INTERNAL MIXER
13	1199026	MAGNETIC EXTERNAL MIXER
23	1240371	MOTOR EMI 16W 82E-2516
24	1240505	SPECIAL EXHAUST FAN ø 230 mm
25	1015046	DRIP TRAY GRID
25	1199070	DRIP TRAY GRID
26	1015044	GREY DRIPPING TRAY
26	1015045	GREY DRIPPING TRAY
30	1313029	FOOT ø 40 mm M8
37	1199048	REAR BUSHING FOR GRANITA MACH. SHOULDER
38	1199049	WASHER FOR MAGNETIC MOTOR
39	1199050	MAGNETIC ROTOR
40	1199051	BUSHING FOR MOTOR SUPPORT FLANGE
41	1199075	O-RING 03231 RED SILICONE
48	1199032	PICTURE SCREEN
51	1221008	LAMP 28V
53	1199013	SPRING FOR LAMP CONTACT
54	1199023	RUBBER PIECE WITH LAMP CONTACT
56	1199052	MODIFIED THERMOSTAT RANCO K50 L3212
57	1199053	KNOB FOR THERMOSTAT
59	1199054	ANTI-CONDENSATE GASKET
63	1357038	TAP FLOW REDUCER
64	1186411	O-RING 02031 EPDM
66	1240500	GEAR MOTOR 115V 60Hz
66	1240501	GEAR MOTOR 230V 50Hz
71	1199056	SAFETY PRESSURE SWITCH
72	1199131	FILTER FOR CONDENSER
81	1199004	COMPLETE SKIMMING BUSHING
101	1199017	BRACKET WITH BUSHING HT
101	1199025	COMPLETE BRIDGE OVER NEW MODEL
102	1199015	STATOR 230V 50Hz
104	1199018	WASHER FOR GEAR MOTOR
105	1199059	ROTOR SPACER FOR GEAR MOTOR
107	1786247	RETAINER SPRING RING ø 20x11x5 mm
108	1199060	BEARING CAP ø 28 mm
109	1186411	O-RING 02031 EPDM
110	1199062	BEARING 6001 2Z
111	1199063	SPACER 1.5 mm FOR GEAR MOTOR
112	1199064	THIRD GEARWHEEL FOR GEAR MOTOR
113	1199065	FOURTH GEARWHEEL FOR GEAR MOTOR
114	1199066	SPACER 3.3 mm FOR GEAR MOTOR
115	1199067	BUSHING CAP FOR GEARMOTOR
117	1199068	FIRST GEARWHEEL FOR GEAR MOTOR
118	1199069	SECOND GEARWHEEL FOR GEAR MOTOR
123	1199019	PINION FOR GEAR MOTOR
124	1199020	BUSHING FOR GEAR MOTOR
125	1199021	WASHER 4x8x0.2 mm FOR GEAR MOTOR

MT GL OLD GRANITA MACHINE

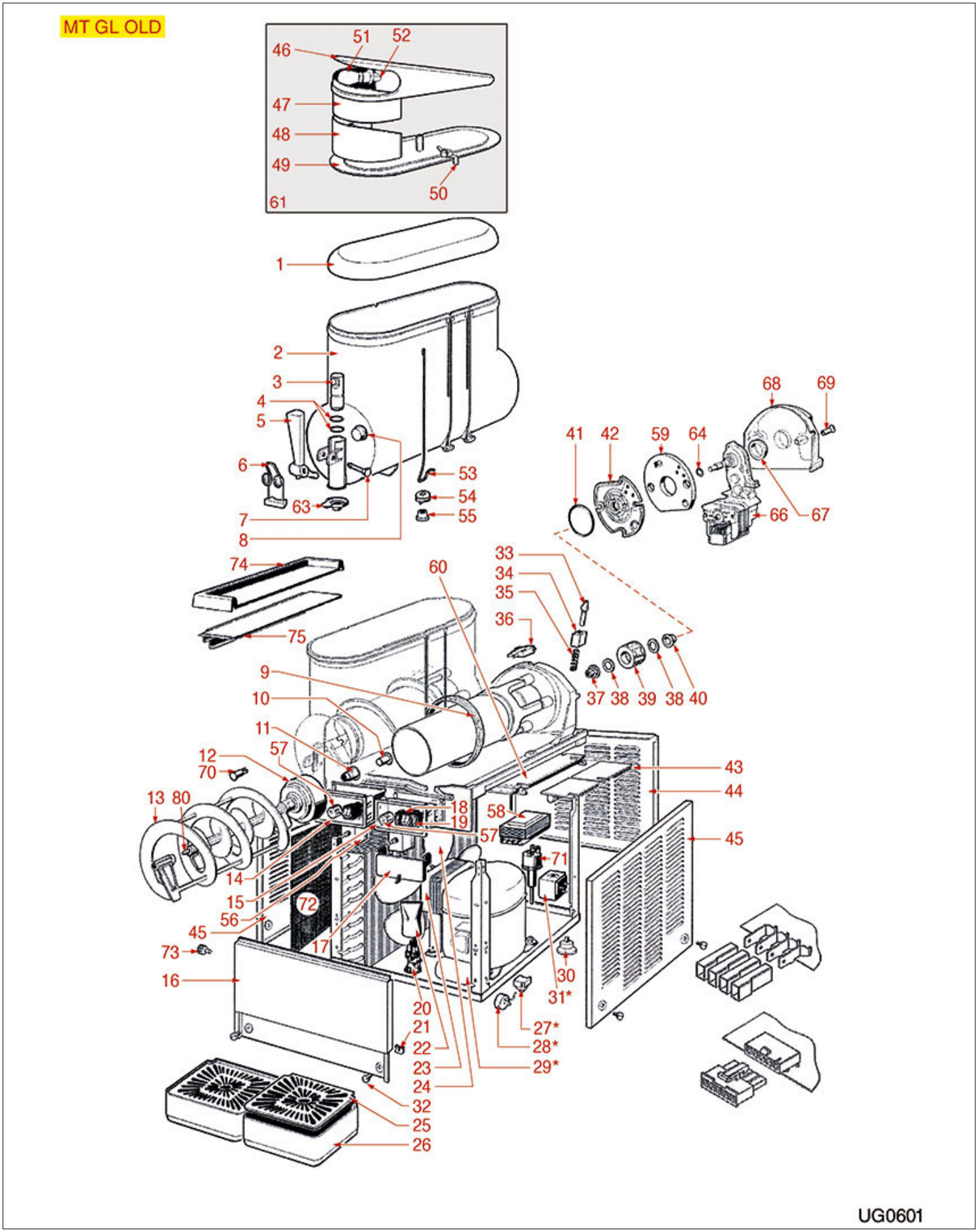

Positions without LF code no.: upon request

UGOLINI

Position	LF code no.	Description
1	1199038	TRANSPARENT COVER
2	1199030	CONTAINER FOR GRANITA MACHINE 10 l
3	1199039	PISTON FOR TAP
4	1199001	O-RING 0123 WHITE SILICONE
5	1357035	TAP CONTROL LEVER
6	1199003	SPRING FOR TAP HANDLE
7	1199040	RED PIN FOR TAP LEVER
8	1199004	COMPLETE SKIMMING BUSHING
9	1199005	GASKET
10	1199006	BACK BUSHING
10	1199007	BACK GASKET
11	1199008	SCROLL BUSHING
12	1199034	INTERNAL SCRAPER ELEMENT
12	1199041	INTERNAL MIXER
13	1199026	MAGNETIC EXTERNAL MIXER
13	1199035	EXTERNAL MIXER
17	1199029	GREY SHUTTER FOR SWITCHES
18	1199027	WHITE THREE-POLE SWITCH 16A 250V
19	1199042	WHITE SINGLE-POLE SWITCH 16A 250V
23	1199503	DARK BLUE LEVER TAP
23	3240902	5-POLE MOTOR ELCO 16W
24	1240505	SPECIAL EXHAUST FAN ø 230 mm
24	3240222	SUCTION BLADE ø 230 mm 28°
25	1199043	DRIP TRAY GRID
25	1199070	DRIP TRAY GRID
26	1199010	DRIP TRAY
33	1199044	ZINC PLATED DENSITY ADJUSTING SCREW
34	1199045	GREY SPRING GUIDE
35	1199046	SPRING FOR DENSITY ADJUSTMENT
36	3240123	MICROSWITCH 16A 250V
37	1199028	GREY LOWER BUSHING
37	1199036	WHITE FRONT BUSHING
37	1199048	REAR BUSHING FOR GRANITA MACH. SHOULDER
38	1199049	WASHER FOR MAGNETIC MOTOR
39	1199050	MAGNETIC ROTOR
40	1199051	BUSHING FOR MOTOR SUPPORT FLANGE
41	1199075	O-RING 03231 RED SILICONE
43	1199012	DELAYER FOR 3 TANKS
43	1199031	DELAYER FOR 2 TANKS
43	1199033	ELECTRONIC DELAYER 115V 60Hz
46	1199037	CAP WITH LIGHT HT-MT
48	1199032	PICTURE SCREEN
51	1221008	LAMP 28V
53	1199013	SPRING FOR LAMP CONTACT
54	1199023	RUBBER PIECE WITH LAMP CONTACT
56	1199052	MODIFIED THERMOSTAT RANCO K50 L3212
57	1199053	KNOB FOR THERMOSTAT
59	1199054	ANTI-CONDENSATE GASKET
61	1199014	SET COVER WITH LIGHT
61	1199055	COVER WITH LIGHT HT-MT GLS
64	1186411	O-RING 02031 EPDM
66	1240500	GEAR MOTOR 115V 60Hz
66	1240501	GEAR MOTOR 230V 50Hz
70	1199073	ORANGE INDICATOR LIGHT 110V
70	1199074	ORANGE INDICATOR LIGHT 24V
71	1199056	SAFETY PRESSURE SWITCH
72	1199131	FILTER FOR CONDENSER
80	1199022	INNER SCRAPER FINAL PORTION

ARCTIC COMPACT 5/8 FRIGODRINK

ARCTIC COMPACT 5-8

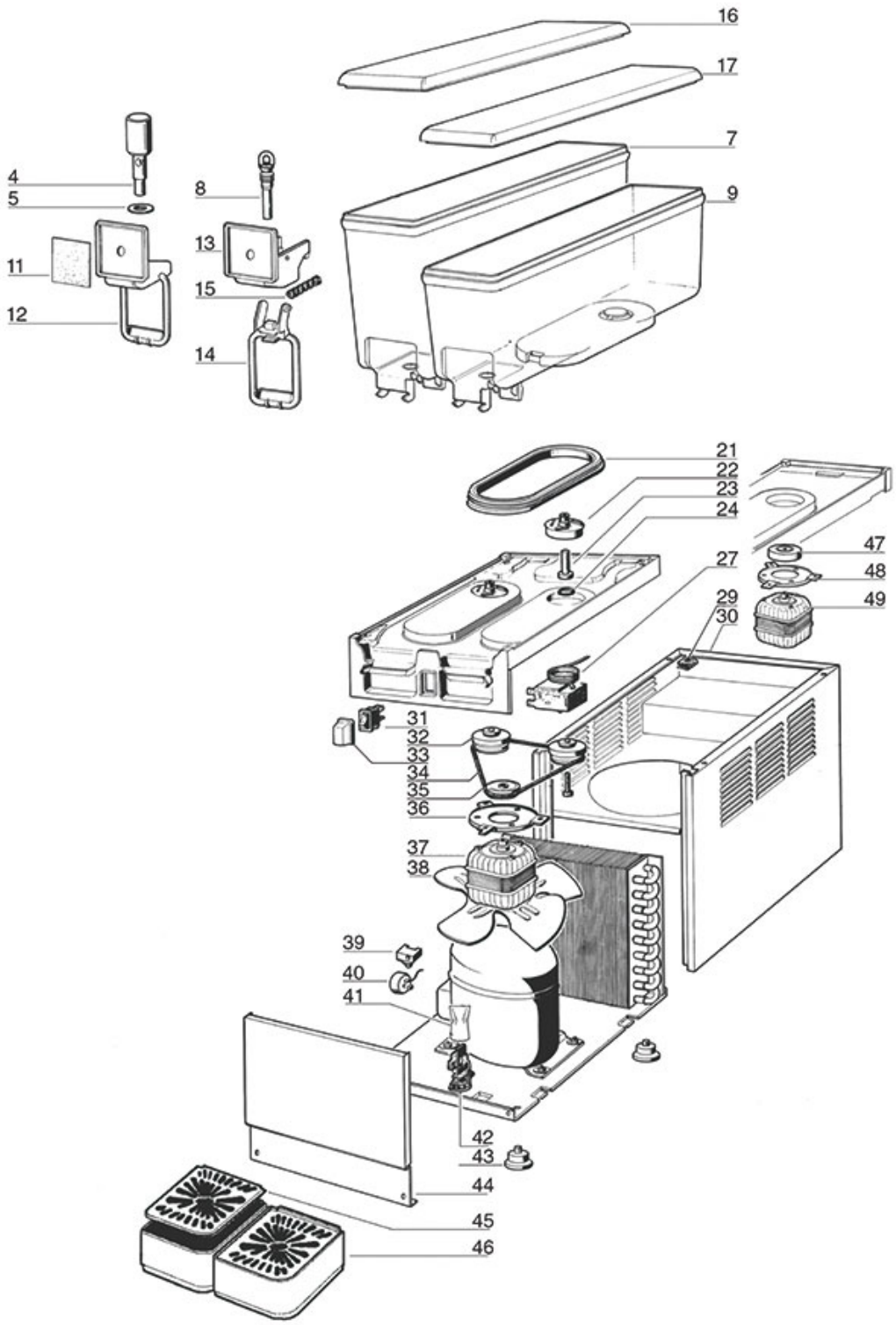

UG2001

Positions without LF code no.: upon request

UGOLINI

Position	LF code no.	Description
4	1199096	FAUCET PISTON
5	1199097	TAP GASKET
8	1199077	RUBBER PIECE FOR TAP
9	1521008	FRIGODRINK TANK 5 L
11	1399013	PICTURE FOR TAP LEVER
12	1357033	TAP CONTROL LEVER
13	1357032	RED TAP COVER
14	1357036	TAP CONTROL LEVER
15	1199084	SPRING FOR TAP
16	1521011	TANK COVER
17	1521011	TANK COVER
21	1199005	GASKET
22	1122012	IMPELLER F/3-BLADES PUMP ø 56 mm 50/60Hz
23	1324161	PUMP CENTRAL PIN
24	3243139	O-RING 02025 EPDM
27	1199087	THERMOSTAT RANCO K50 L3218
31	1199079	WHITE SINGLE-POLE SWITCH 16A 250V
33	1199081	PROTECTION FOR SWITCH
34	1062005	MOTOR FAN BELT
35	1199105	MOTOR PULLEY ø 7 mm
36	1199089	MOTOR BRACKET
37	1240369	MOTOR EMI 20W 82-2516/32
37	1240514	MOTOR EMI 16W 82CE-2516/4
38	1240373	EXHAUST ø 170 mm 40°
43	1313029	FOOT ø 40 mm M8
45	1015047	DRIP TRAY GRID
45	1199043	DRIP TRAY GRID
47	1199088	4-POLE MOTOR MAGNET ø 7 mm
48	1199089	MOTOR BRACKET
49	1240510	MOTOR EMI 11W 82CE-2011/1

ARCTIC COMPACT 12/20 FRIGODRINK

ARCTIC COMPACT 12-20

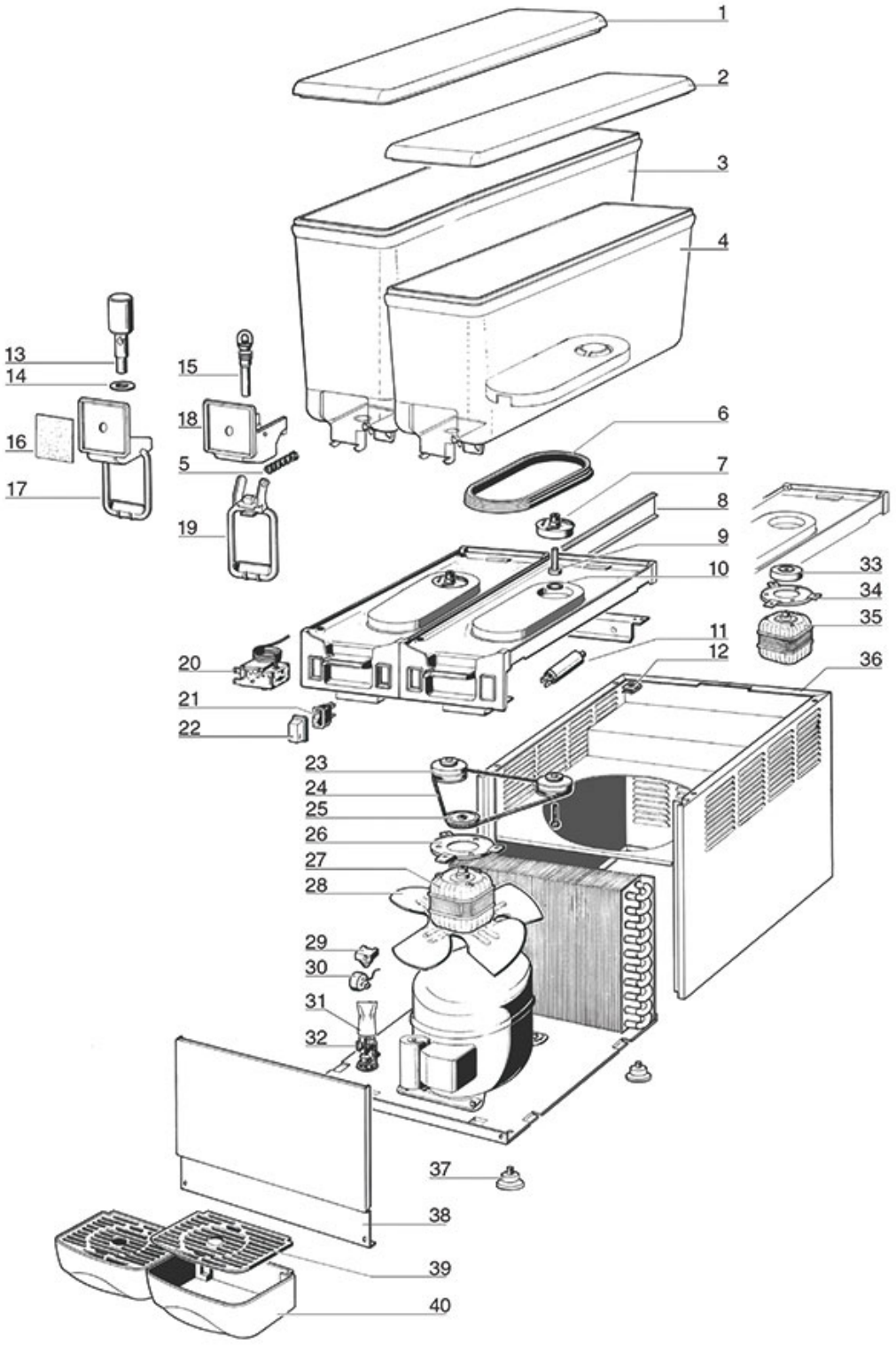

UG2101

Positions without LF code no.: upon request

UGOLINI

Position	LF code no.	Description
1	1521012	TANK COVER
2	1521012	TANK COVER
5	1199084	SPRING FOR TAP
6	1199005	GASKET
7	1122012	IMPELLER F/3-BLADES PUMP ø 56 mm 50/60Hz
9	1324161	PUMP CENTRAL PIN
10	3243139	O-RING 02025 EPDM
13	1199096	FAUCET PISTON
14	1199097	TAP GASKET
15	1199077	RUBBER PIECE FOR TAP
16	1399013	PICTURE FOR TAP LEVER
17	1357033	TAP CONTROL LEVER
18	1357032	RED TAP COVER
19	1357036	TAP CONTROL LEVER
20	1199087	THERMOSTAT RANCO K50 L3218
21	1199079	WHITE SINGLE-POLE SWITCH 16A 250V
22	1199081	PROTECTION FOR SWITCH
23	1318001	MAGNETIC PULLEY
24	1062004	MOTOR FAN BELT
25	1199105	MOTOR PULLEY ø 7 mm
26	1199089	MOTOR BRACKET
27	1240370	MOTOR EMI 26W 83-2025/5
27	1240510	MOTOR EMI 11W 82CE-2011/1
33	1199088	4-POLE MOTOR MAGNET ø 7 mm
34	1199089	MOTOR BRACKET
35	1240510	MOTOR EMI 11W 82CE-2011/1
37	1313029	FOOT ø 40 mm M8
39	1015046	DRIP TRAY GRID
40	1015044	GREY DRIPPING TRAY

UGOLINI

ARCTIC DELUXE 12/20 FRIGODRINK

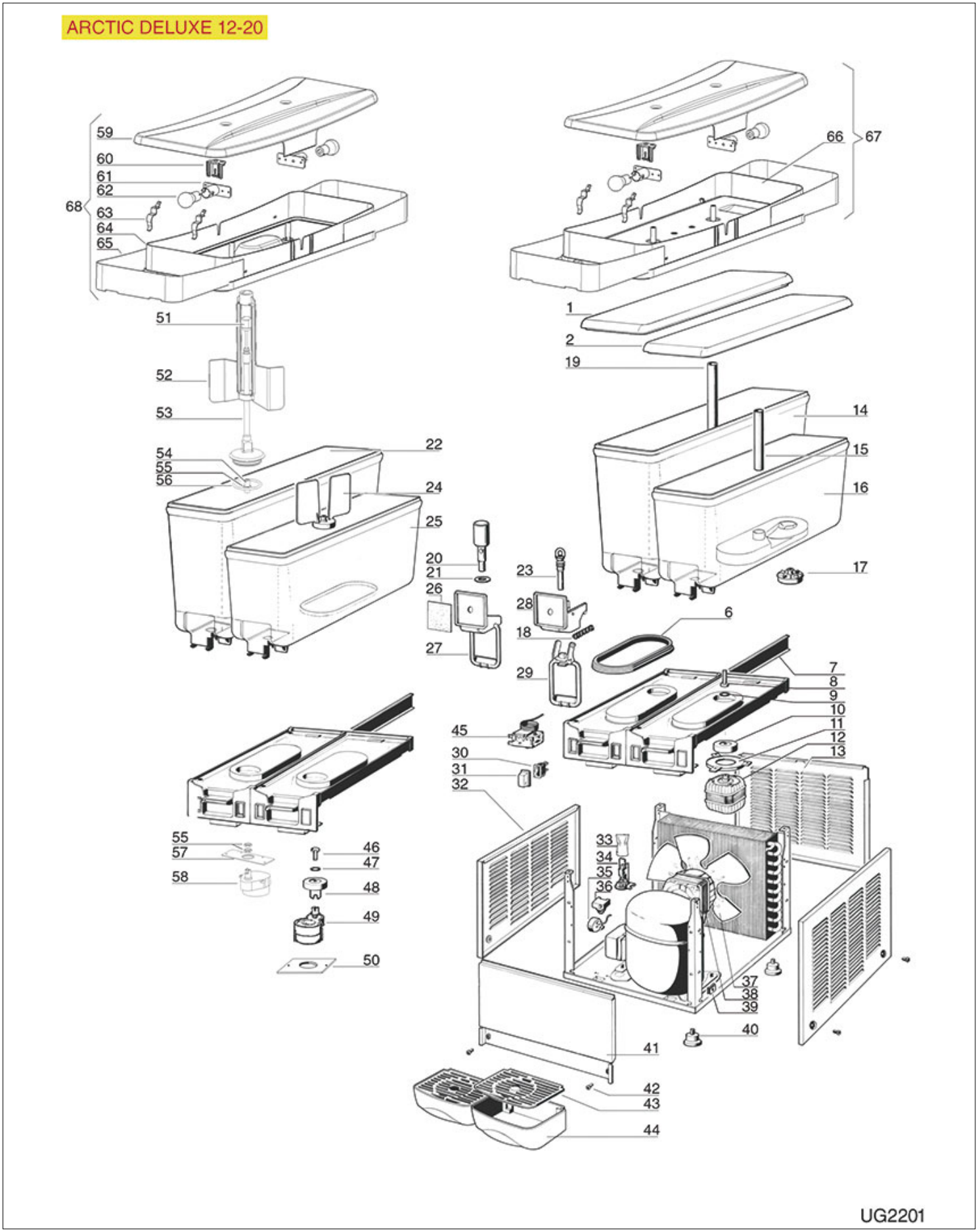

Positions without LF code no.: upon request

UGOLINI

Position	LF code no.	Description
1	1521012	TANK COVER
2	1521012	TANK COVER
6	1199005	GASKET
8	1324161	PUMP CENTRAL PIN
9	3243139	O-RING 02025 EPDM
10	1199088	4-POLE MOTOR MAGNET ø 7 mm
11	1199089	MOTOR BRACKET
12	1240510	MOTOR EMI 11W 82CE-2011/1
14	1521009	FRIGODRINK TANK 20 L
15	1450008	PUMP OUTLET PIPE 182 mm 12 L
16	1521010	FRIGODRINK TANK 12 L
17	1122011	IMPELLER FOR 8-BLADES PUMP ø 56 mm 50Hz
17	1122013	IMPELLER FOR 8-BLADES PUMP ø 56 mm 60Hz
18	1199084	SPRING FOR TAP
19	1450009	PUMP OUTLET PIPE 287 mm 20 L
20	1199096	FAUCET PISTON
21	1199097	TAP GASKET
23	1199077	RUBBER PIECE FOR TAP
26	1399013	PICTURE FOR TAP LEVER
27	1357033	TAP CONTROL LEVER
28	1357032	RED TAP COVER
29	1357036	TAP CONTROL LEVER
30	1199079	WHITE SINGLE-POLE SWITCH 16A 250V
31	1199081	PROTECTION FOR SWITCH
37	1240505	SPECIAL EXHAUST FAN ø 230 mm
38	3240501	AXIAL VENTILATOR SUNON 120x120x38 mm
40	1313029	FOOT ø 40 mm M8
43	1015046	DRIP TRAY GRID
44	1015044	GREY DRIPPING TRAY
45	1199087	THERMOSTAT RANCO K50 L3218
58	1240512	MOTOR GEAR CDC AT011 S80ES
58	3340172	GEARMOTOR FIBER GE15J0BAHDC
62	1221008	LAMP 28V

UGOLINI

CADDY 5/2 5/3 5/4 FRIGODRINK

CADDY 5/2 5/3 5/4

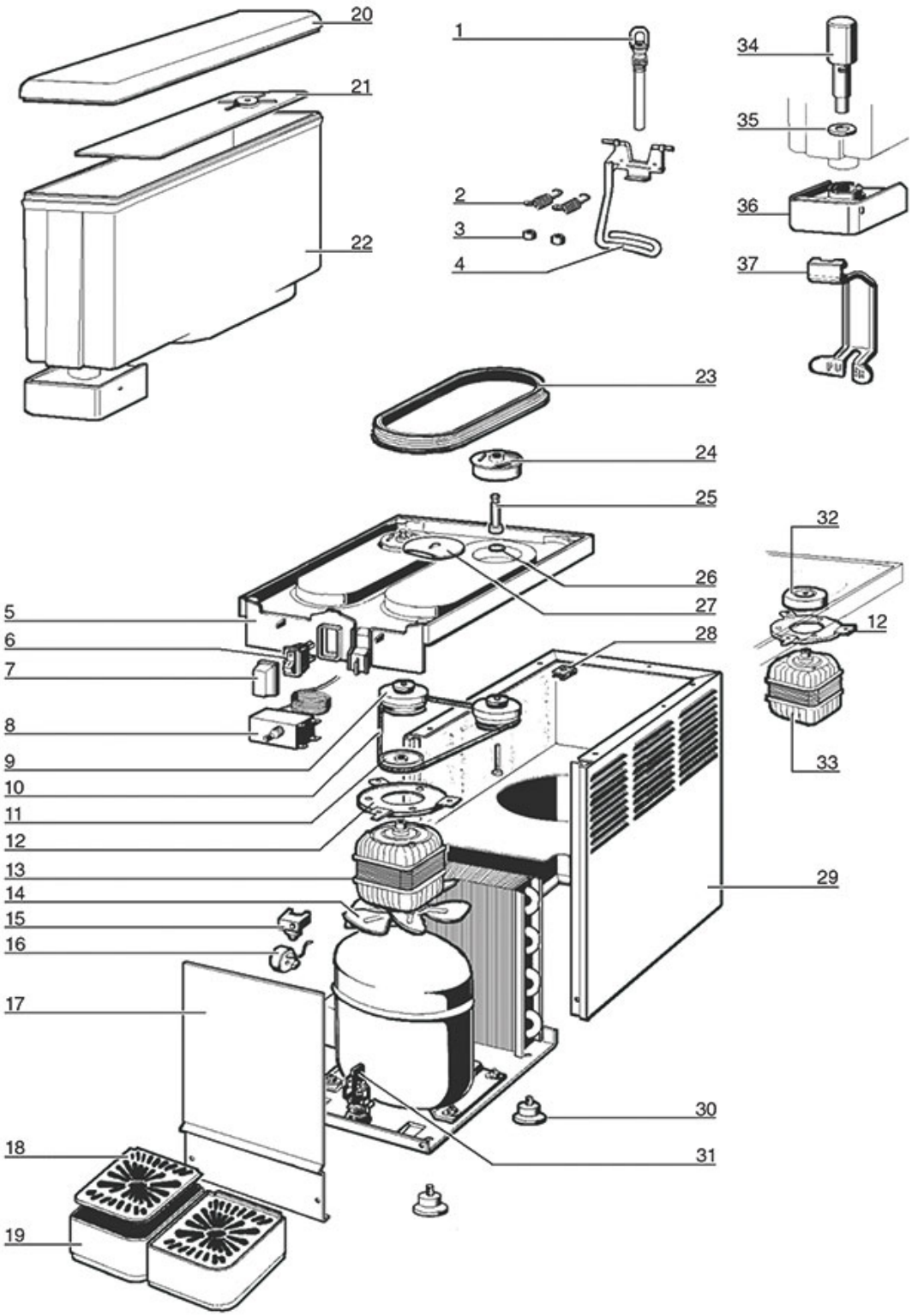

UG2301

Positions without LF code no.: upon request

UGOLINI

Position	LF code no.	Description
1	1199077	RUBBER PIECE FOR TAP
2	1250600	TAP SPRING
3	1186050	SPRING RETAINING RUBBER PIECE
4	1199139	TAP LEVER
6	1199079	WHITE SINGLE-POLE SWITCH 16A 250V
7	1199081	PROTECTION FOR SWITCH
8	1199087	THERMOSTAT RANCO K50 L3218
9	1199103	PULLEY WITH BEARING
10	1062005	MOTOR FAN BELT
11	1199105	MOTOR PULLEY ø 7 mm
12	1199089	MOTOR BRACKET
13	1240510	MOTOR EMI 11W 82CE-2011/1
18	1015047	DRIP TRAY GRID
18	1199043	DRIP TRAY GRID
19	1199010	DRIP TRAY
20	1199136	COVER
21	1199138	SCROLL FOR PUMP
22	1199137	CONTAINER 5 L TAP WITH RUBBER PART
22	1199146	5 L CONTAINER FOR GRAVITY TAP
23	1199005	GASKET
24	1199094	PUMP IMPELLER WITH LOW WINGS
25	1199102	CENTRAL PIN
26	3243139	O-RING 02025 EPDM
27	1199133	SCROLL FASTENING PLATE
30	1313029	FOOT ø 40 mm M8
32	1199088	4-POLE MOTOR MAGNET ø 7 mm
33	1240510	MOTOR EMI 11W 82CE-2011/1
34	1199096	FAUCET PISTON
35	1199097	TAP GASKET
36	1199098	PISTON TAP COVER
37	1199099	TAP LEVER

CADDY 7/1 10/1 10/2 FRIGODRINK

CADDY 7/1 10/1 10/2

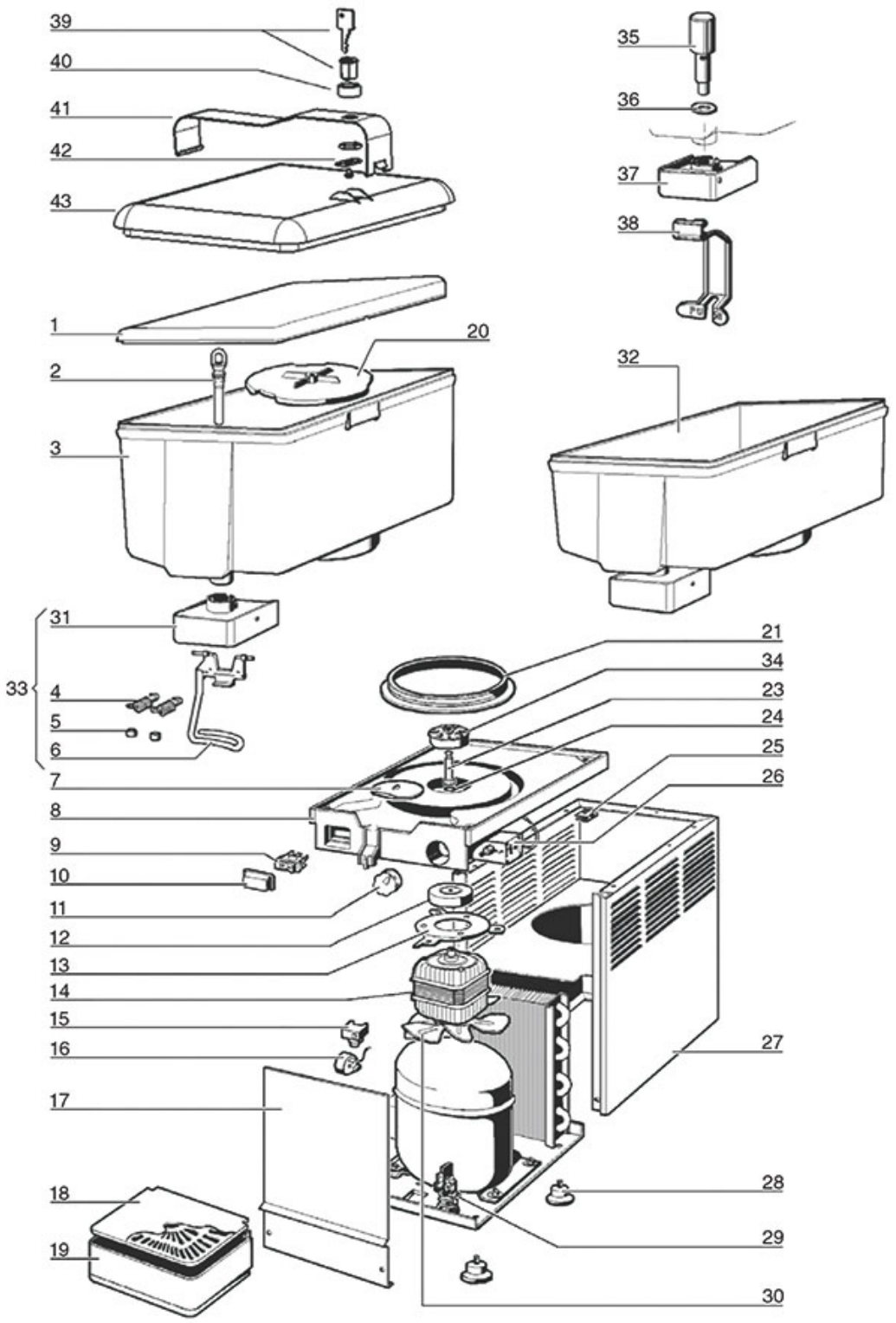

UG2401

Positions without LF code no.: upon request

UGOLINI

Position	LF code no.	Description
1	1199144	CONTAINER LID
2	1199077	RUBBER PIECE FOR TAP
3	1199127	CONTAINER 10 L
4	1250600	TAP SPRING
5	1186050	SPRING RETAINING RUBBER PIECE
6	1199139	TAP LEVER
7	1199133	SCROLL FASTENING PLATE
9	1199079	WHITE SINGLE-POLE SWITCH 16A 250V
10	1199081	PROTECTION FOR SWITCH
12	1199088	4-POLE MOTOR MAGNET ø 7 mm
13	1199089	MOTOR BRACKET
18	1199043	DRIP TRAY GRID
19	1199010	DRIP TRAY
20	1199145	SCROLL FOR PUMP
21	1186052	SEALING GASKET
23	1199102	CENTRAL PIN
24	3243139	O-RING 02025 EPDM
26	1199086	THERMOSTAT RANCO K50 L3212
28	1313029	FOOT ø 40 mm M8
33	1199095	COMPLETE TAP RED
34	1199094	PUMP IMPELLER WITH LOW WINGS
34	1199101	PUMP IMPELLER FOR CADDY 10 L
35	1199096	FAUCET PISTON
36	1199097	TAP GASKET
37	1199098	PISTON TAP COVER
38	1199099	TAP LEVER

UGOLINI

HT10 FRIGODRINK

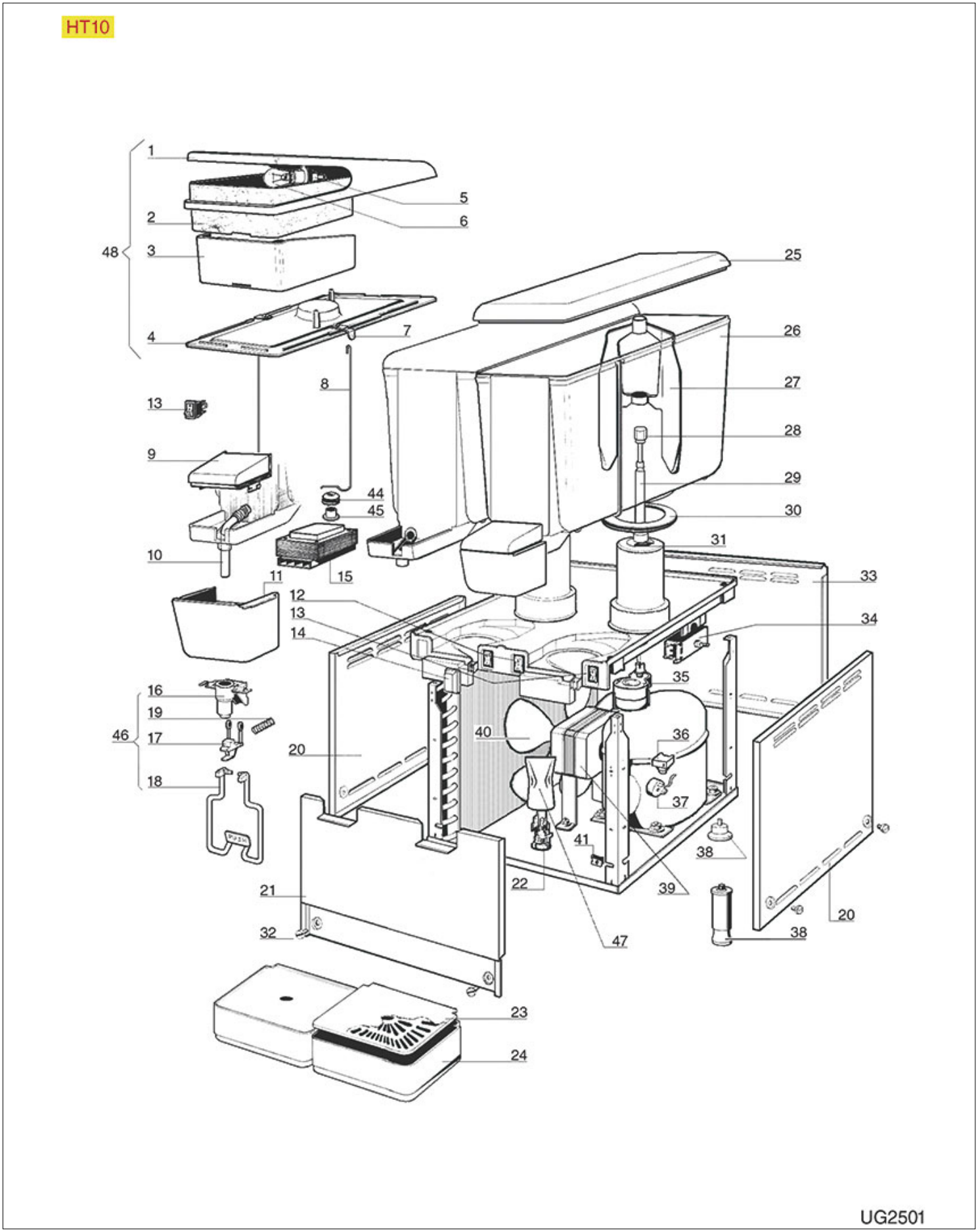

Positions without LF code no.: upon request

UGOLINI

Position	LF code no.	Description
6	1221008	LAMP 28V
10	1199109	RUBBER PIECE FOR TAP
11	1199134	TAP GREY COVER
12	1199080	WHITE THREE-POLE SWITCH 10A 120V
13	1199079	WHITE SINGLE-POLE SWITCH 16A 250V
14	1199081	PROTECTION FOR SWITCH
16	1199083	TAP BODY
17	1199106	TAP FORK
18	1199107	TAP LEVER
19	1199084	SPRING FOR TAP
23	1199043	DRIP TRAY GRID
24	1199010	DRIP TRAY
26	1199130	CONTAINER 10 L
30	1199085	GASKET FOR CONTAINER
31	3243191	O-RING 02125 EPDM
34	1199086	THERMOSTAT RANCO K50 L3212
34	1199087	THERMOSTAT RANCO K50 L3218
35	1240512	MOTOR GEAR CDC AT011 S80ES
35	3340172	GEARMOTOR FIBER GE15J0BAHDC
38	1313029	FOOT ø 40 mm M8
44	1199023	RUBBER PIECE WITH LAMP CONTACT
46	1199082	COMPLETE TAP

HT11-HT20 FRIGODRINK

HT11-HT20

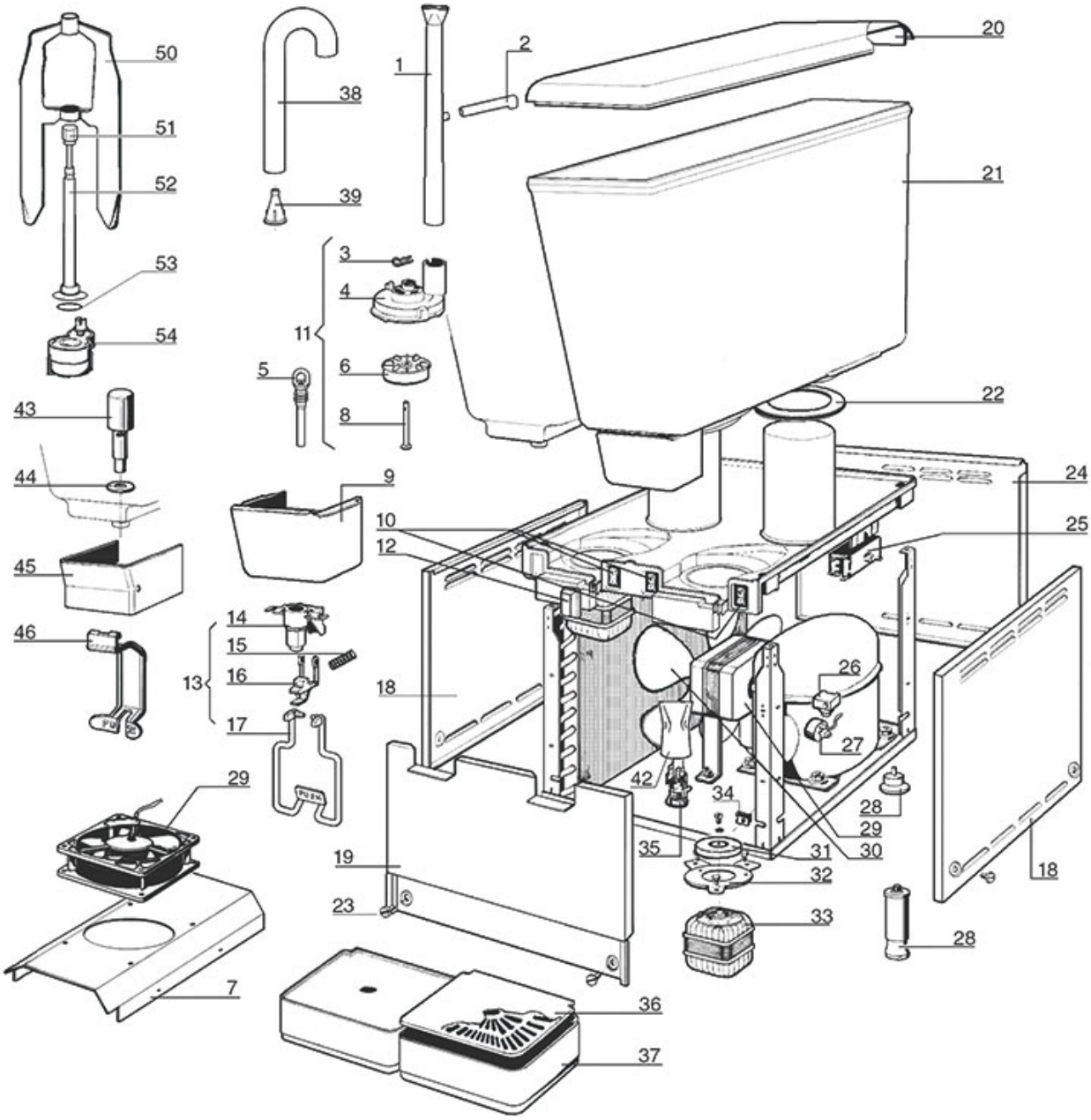

Positions without LF code no.: upon request

UGOLINI

Position	LF code no.	Description
1	1199135	OUTLET TUBE
1	1199141	OUTLET TUBE
2	1199142	L-ARM FOR 11/20 L CONTAINER
3	1199143	NON-RETURN SPRING
4	1199076	PUMP HOUSING
5	1199077	RUBBER PIECE FOR TAP
6	1199093	PUMP IMPELLER 230/240V 50Hz
6	1199100	PUMP IMPELLER 115/220V 60Hz
8	1199078	IMPELLER SHAFT FOR PUMP
9	1199134	TAP GREY COVER
10	1199079	WHITE SINGLE-POLE SWITCH 16A 250V
12	1199081	PROTECTION FOR SWITCH
13	1199082	COMPLETE TAP
14	1199083	TAP BODY
15	1199084	SPRING FOR TAP
16	1199106	TAP FORK
17	1199107	TAP LEVER
20	1199125	LID 11 L
20	1199126	COVER 20 L
21	1199128	CONTAINER 20 L
21	1199129	CONTAINER 11 L
22	1199085	GASKET FOR CONTAINER
25	1199086	THERMOSTAT RANCO K50 L3212
25	1199087	THERMOSTAT RANCO K50 L3218
28	1313029	FOOT ø 40 mm M8
29	1240506	MOTOR FAN 10W 230/240V 50Hz
29	3240501	AXIAL VENTILATOR SUNON 120x120x38 mm
31	1199088	4-POLE MOTOR MAGNET ø 7 mm
32	1199089	MOTOR BRACKET
33	1240510	MOTOR EMI 11W 82CE-2011/1
36	1199043	DRIP TRAY GRID
37	1199010	DRIP TRAY
38	1199090	ANTIFOAM PIPE
38	1199091	ANTIFOAM PIPE
39	1199092	REDUCER CAP
43	1199096	FAUCET PISTON
44	1199097	TAP GASKET
46	1199099	TAP LEVER
53	3243191	O-RING 02125 EPDM
54	1240512	MOTOR GEAR CDC AT011 S80ES
54	3340172	GEARMOTOR FIBER GE15J0BAHDC

A12-A19 FRIGODRINK

A12-A19

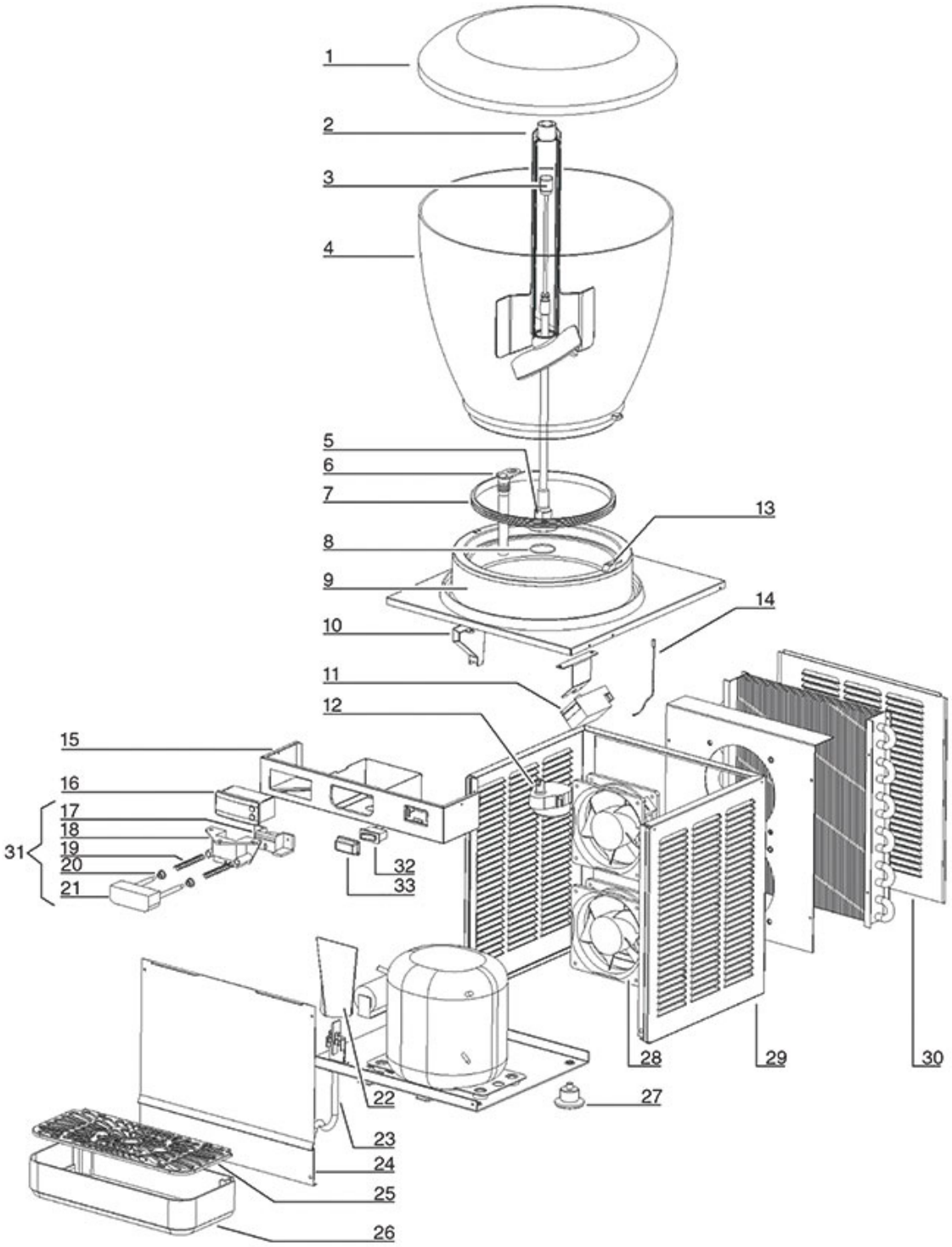

Positions without LF code no.: upon request

UGOLINI

Position	LF code no.	Description
8	3243191	O-RING 02125 EPDM
12	1240512	MOTOR GEAR CDC AT011 S80ES
20	1199059	ROTOR SPACER FOR GEAR MOTOR
25	1199070	DRIP TRAY GRID
26	1015045	GREY DRIPPING TRAY
27	1313029	FOOT ø 40 mm M8
28	3240501	AXIAL VENTILATOR SUNON 120x120x38 mm
32	1199080	WHITE THREE-POLE SWITCH 10A 120V
33	1199081	PROTECTION FOR SWITCH

DELICE OLD HOT CHOCOLATE MACHINE

DELICE OLD

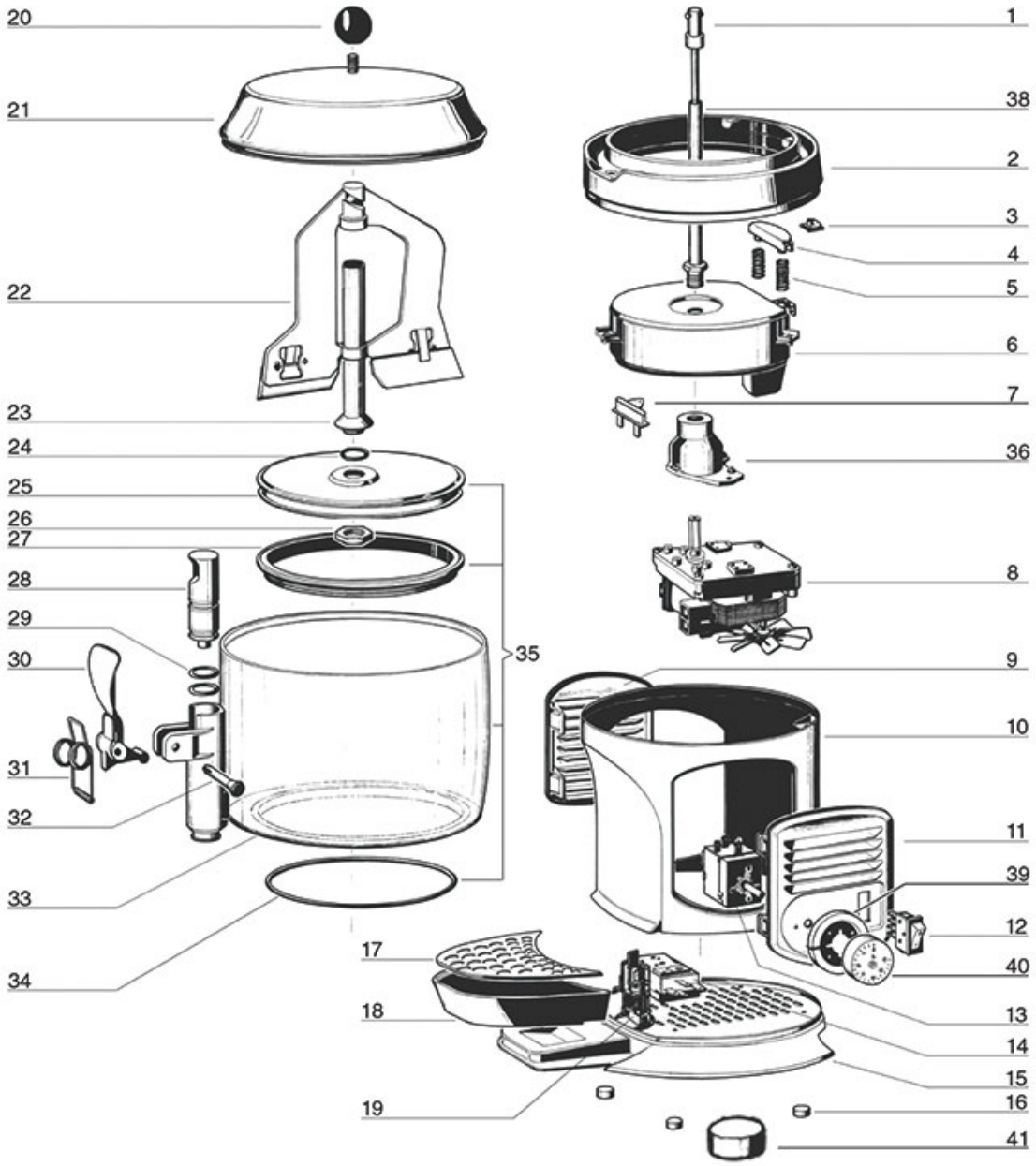

Positions without LF code no.: upon request

UGOLINI

Position	LF code no.	Description
1	1199140	TRANSMISSION SHAFT
8	1240515	GEAR MOTOR 230V 50Hz
8	1240516	GEAR MOTOR 115V 60Hz
13	1444109	THERMOSTAT TR2 0+90°C COMPLETE
14	1444009	THERMOSTAT 0-120°C
22	1199132	MIXER FOR HOT CHOCOLATE MAKER DELICE
24	1186053	O-RING 03081 WHITE SILICONE
27	1186054	GASKET FOR TANK
28	1199112	TAP PISTON
29	1199001	O-RING 0123 WHITE SILICONE
30	1199113	RED TAP LEVER
30	1199114	BLACK TAP LEVER
31	1250601	TAP SPRING
32	1199040	RED PIN FOR TAP LEVER
32	1199115	BLACK SPINDLE FOR TAP LEVER
33	1199116	TRANSPARENT CONTAINER
34	1199117	O-RING FOR CONTAINER
35	1199118	COMPLETE CONTAINER

DELICE NEW HOT CHOCOLATE MACHINE

DELICE NEW

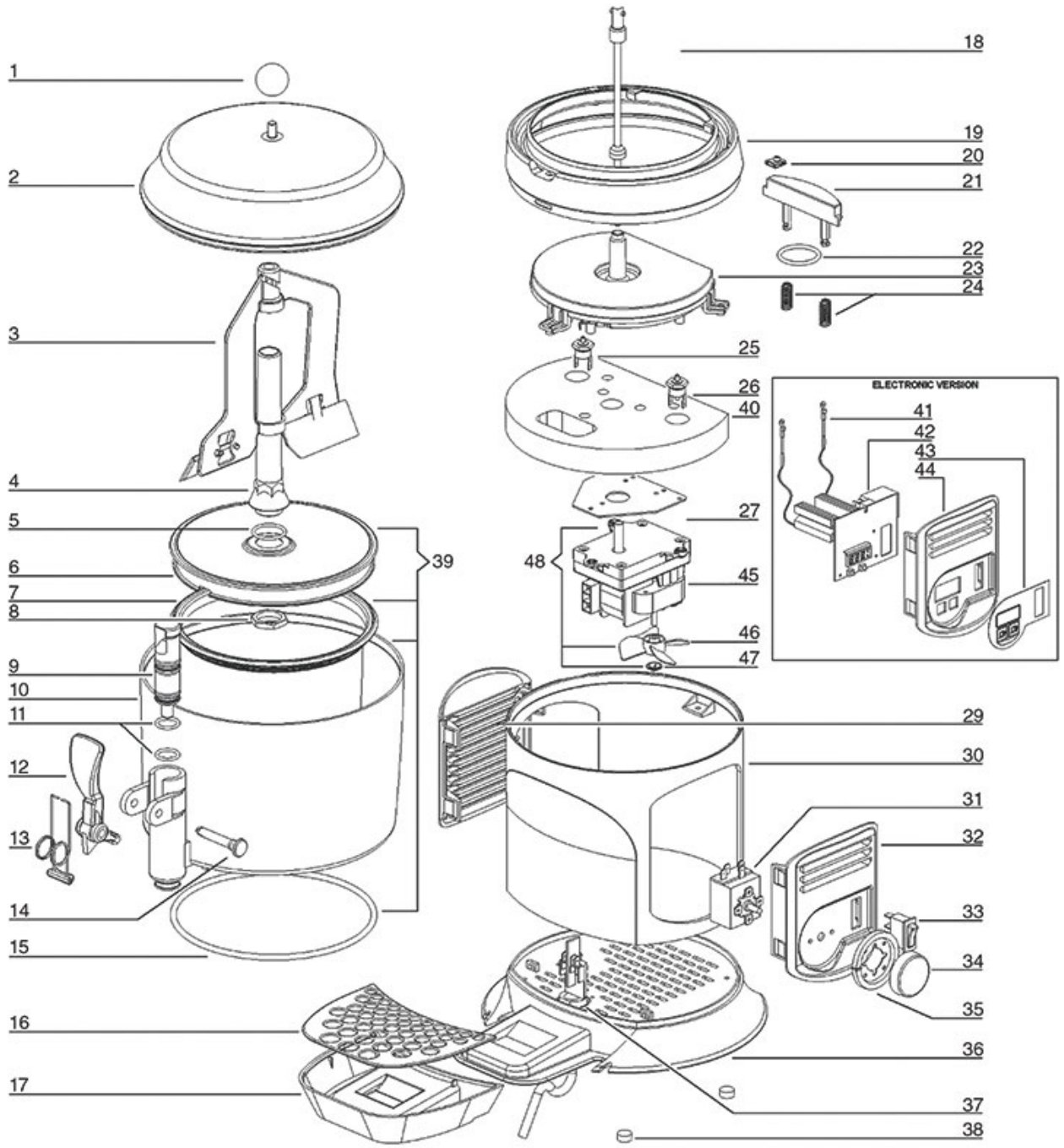

Positions without LF code no.: upon request

UGOLINI

Position	LF code no.	Description
3	1199132	MIXER FOR HOT CHOCOLATE MAKER DELICE
5	1786243	O-RING 03106 WHITE SILICONE
7	1186054	GASKET FOR TANK
9	1199112	TAP PISTON
10	1199116	TRANSPARENT CONTAINER
11	1199001	O-RING 0123 WHITE SILICONE
12	1199113	RED TAP LEVER
12	1199114	BLACK TAP LEVER
13	1250601	TAP SPRING
14	1199040	RED PIN FOR TAP LEVER
14	1199115	BLACK SPINDLE FOR TAP LEVER
15	1199117	O-RING FOR CONTAINER
31	1444109	THERMOSTAT TR2 0+90°C COMPLETE
45	1240515	GEAR MOTOR 230V 50Hz
45	1240516	GEAR MOTOR 115V 60Hz

DELICE 3LT HOT CHOCOLATE MACHINE

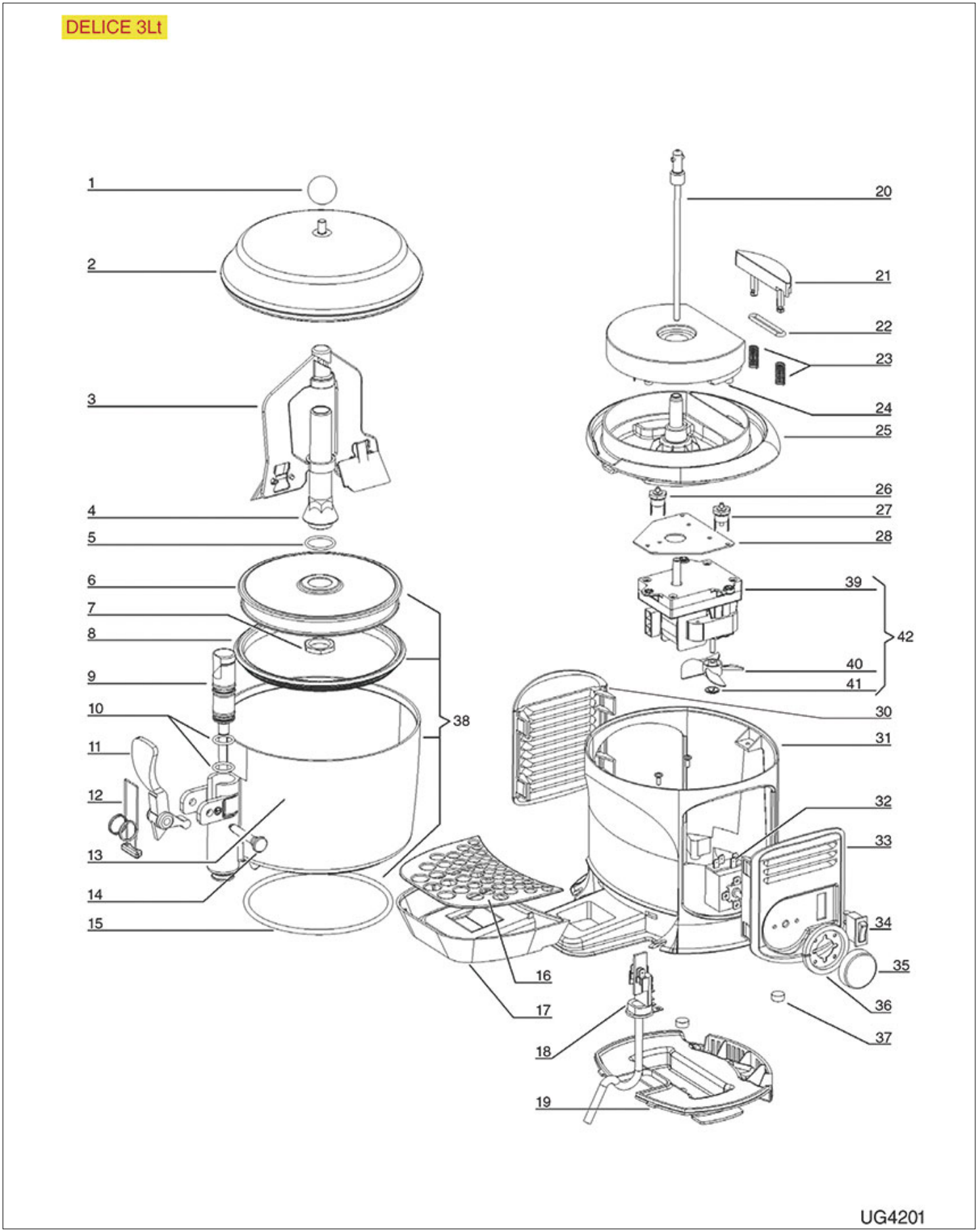

Positions without LF code no.: upon request

UGOLINI

Position	LF code no.	Description
5	1786243	O-RING 03106 WHITE SILICONE
9	1199112	TAP PISTON
10	1199001	O-RING 0123 WHITE SILICONE
11	1199113	RED TAP LEVER
11	1199114	BLACK TAP LEVER
12	1250601	TAP SPRING
14	1199040	RED PIN FOR TAP LEVER
14	1199115	BLACK SPINDLE FOR TAP LEVER
32	1444109	THERMOSTAT TR2 0+90°C COMPLETE
39	1240515	GEAR MOTOR 230V 50Hz
39	1240516	GEAR MOTOR 115V 60Hz

Baffles

1095062 **"L" MIDDLE FUNNEL**
long side 53 mm - short side 37 mm

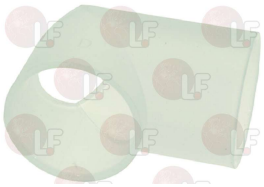

UGOLINI 22600-01150

1095039 **CONVEYOR MIXER FAN**
external ø 32 mm

UGOLINI 22600-01241

1095042 **FLANGE FOR MIXER**

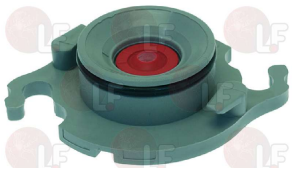

UGOLINI 22600-01250

1095060 **FUNNEL CAP**
external ø 65 mm - internal ø 42 mm

UGOLINI 22600-01220

1095044 **FUNNEL HOLE ø 12 mm**

UGOLINI 22600-01210

1095069 **LARGE OUTLET FITTING**
hose end fitting ø 9 mm

UGOLINI 22600-01280

1095053 **LOCKING NUT FOR MOTOR MIXER**

UGOLINI 22600-01260

1095068 **MIXER FAN BLADE 10 mm**
length 40 mm

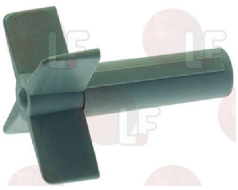

UGOLINI 22600-01240

1095038 **MIXER FUNNEL**
external ø 62 mm - overall height 57 mm

UGOLINI 22600-01200

1095043 **POWDER FUNNEL**

UGOLINI 22600-01212

UGOLINI

Suitable for:

1095065 POWDER FUNNEL GASKET
max.overall size 58x27 mm

UGOLINI 22600-01230

Suitable for:

1095067 SMALL OUTLET FITTING
hose end fitting ø 10 mm

UGOLINI 22600-01281

1095066 WATER COUPLING
overall height 43 mm - ø hose-end fitting 7 mm

UGOLINI 22600-01290

Bearings

1199060 BEARING CAP ø 28 mm

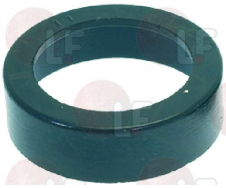

UGOLINI 00028-03216 UGOLINI 10028-03216

1199062 BEARING 6001 2Z
ø external 28 mm - ø internal 12 mm - thickness 8
for Granita machine (UGOLINI) GIANTGL - ITGL
ITGLS - MTMINI

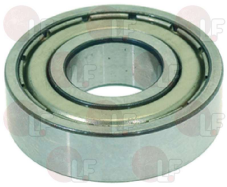

UGOLINI 02800-22613 UGOLINI 22800-22613

Belts

1062004 MOTOR FAN BELT
for Granita machine (UGOLINI) ARCTIC COMPACT12
ARCTIC COMPACT20

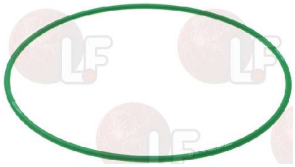

UGOLINI 22900-03600 UGOLINI 22900-03601

1062005 MOTOR FAN BELT
for Granita machine (UGOLINI) ARCTIC COMPACT5
ARCTIC COMPACT8

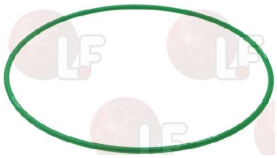

UGOLINI 02800-01800 UGOLINI 22800-01800 UGOLINI 22900-03602

Bodies

1199029 GREY SHUTTER FOR SWITCHES

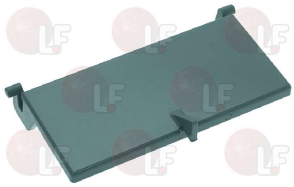

UGOLINI 02800-16600 UGOLINI 22800-16600

1199032 PICTURE SCREEN
for Granita machine (UGOLINI) ITGL - ITGLS - MTGL

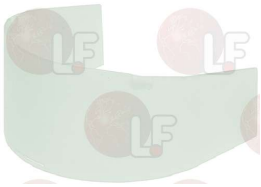

UGOLINI 02800-16000 UGOLINI 22800-16000

Bushes

1199006 BACK BUSHING
for UGOLINI MTGL-GIANTGL-ITGL-ITGLS

UGOLINI 00028-02803 UGOLINI 10028-02803

1199017 BRACKET WITH BUSHING HT

UGOLINI 02800-22600 UGOLINI 22800-22600

1199067 BUSHING CAP FOR GEARMOTOR

UGOLINI 00028-03215 UGOLINI 02800-22606 UGOLINI 10028-03215
UGOLINI 10028-03220

1199020 BUSHING FOR GEAR MOTOR

UGOLINI 00028-03204 UGOLINI 02800-22633 UGOLINI 10028-03204

1199051 BUSHING FOR MOTOR SUPPORT FLANGE
for UGOLINI MTGL-GIANTGL-ITGL-ITGLS

UGOLINI 00028-02800 UGOLINI 10028-02800

1199004 COMPLETE SKIMMING BUSHING
for UGOLINI MTMINI-MTGL-GIANTGL-ITGL-ITGLS

UGOLINI 02800-23500 UGOLINI 22800-23500 UGOLINI 22800-23501
UGOLINI 22800-23501+23502 UGOLINI 22800-23502

1199028 GREY LOWER BUSHING
for UGOLINI MTMINI

UGOLINI 02800-22401 UGOLINI 22800-22401

1199048 REAR BUSHING FOR GRANITA MACH. SHOULDER
for UGOLINI MTGL-GIANTGL-ITGL-ITGLS

UGOLINI 00028-02802 UGOLINI 10028-02802

1199008 SCROLL BUSHING
for UGOLINI MTGL-GIANTGL-ITGL-ITGLS

UGOLINI 00028-02801 UGOLINI 10028-02801

1704004 SCROLL BUSHING
for UGOLINI MTMINI

UGOLINI 22700-01200

UGOLINI

Suitable for:

Suitable for:

1199036 WHITE FRONT BUSHING

UGOLINI 22800-22400

Caps

1199092 REDUCER CAP
for Frigo drink (UGOLINI) HT11 - HT20

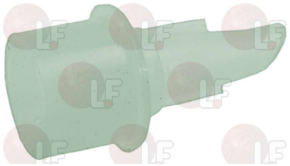

UGOLINI 02800-01500 UGOLINI 22800-01500

Dispenser taps and accessories

1199115 BLACK SPINDLE FOR TAP LEVER
for UGOLINI DELICE OLD-DELICE NEW-DELICE 3Lt

UGOLINI 02800-22160 UGOLINI 22800-22160

1199114 BLACK TAP LEVER
for UGOLINI DELICE OLD-DELICE NEW-DELICE 3Lt

UGOLINI 02800-26423 UGOLINI 22700-01801 UGOLINI 22800-26423

1199082 COMPLETE TAP
for UGOLINI HT10-HT11-HT20

UGOLINI 03800-00200 UGOLINI 33800-00200

1199095 COMPLETE TAP RED
for UGOLINI CADDY7/1-CADDY10/1-CADDY10/2

UGOLINI 33800-08900

1199503 DARK BLUE LEVER TAP

UGOLINI

1357037 DISPENSER TAP PISTON
for UGOLINI MTMINI-MTGL-GIANTGL-ITGL-ITGLS

UGOLINI 22800-14802

UGOLINI

Suitable for:

1199096 FAUCET PISTON

for UGOLINI ARCTIC COMPACT 5/8
for UGOLINI ARCTIC COMPACT 12/20
for UGOLINI ARCTIC DELUXE 12/20
for UGOLINI CADDY5/2-CADDY5/3-CADDY5/4
for UGOLINI CADDY7/1-CADDY10/1-CADDY10/2
for UGOLINI HT11-HT20

UGOLINI 02800-21900 UGOLINI 22800-21900

Suitable for:

1199039 PISTON FOR TAP

UGOLINI 02800-14800 UGOLINI 22800-14800

1199098 PISTON TAP COVER

for UGOLINI CADDY5/2-CADDY5/3-CADDY5/4
for UGOLINI CADDY7/1-CADDY10/1-CADDY10/2

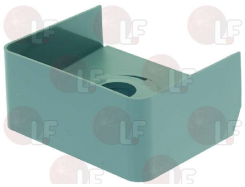

UGOLINI 02800-04410 UGOLINI 22800-04410

1199040 RED PIN FOR TAP LEVER

for UGOLINI MTMINI-MTGL-GIANTGL-ITGL-ITGLS
for UGOLINI DELICE OLD-DELICE NEW-DELICE 3Lt

UGOLINI 02800-22100 UGOLINI 22800-22100

1357032 RED TAP COVER

for UGOLINI ARCTIC COMPACT 5/8
for UGOLINI ARCTIC COMPACT 12/20
for UGOLINI ARCTIC DELUXE 12/20

UGOLINI 22900-00800

1199113 RED TAP LEVER

for Chocolate maker (UGOLINI) DELICENEW
DELICEOLD - DELICE3LT
for Granita machine (UGOLINI) MTMINI

UGOLINI 22700-01800 UGOLINI 22800-26425

1199077 RUBBER PIECE FOR TAP

for UGOLINI ARCTIC COMPACT 5/8
for UGOLINI ARCTIC COMPACT 12/20
for UGOLINI ARCTIC DELUXE 12/20
for UGOLINI CADDY5/2-CADDY5/3-CADDY5/4
for UGOLINI CADDY7/1-CADDY10/1-CADDY10/2
for UGOLINI HT11-HT20

UGOLINI 01703-00000 UGOLINI 21703-00000

1199109 RUBBER PIECE FOR TAP

for UGOLINI HT10

UGOLINI 22800-11500

UGOLINI

Suitable for:

1199083 **TAP BODY**
for UGOLINI HT10-HT11-HT20

UGOLINI 02800-02401 UGOLINI 22800-02401

Suitable for:

1357033 **TAP CONTROL LEVER**
for UGOLINI ARCTIC COMPACT 5/8
for UGOLINI ARCTIC COMPACT 12/20
for UGOLINI ARCTIC DELUXE 12/20

UGOLINI 22900-00500

1357034 **TAP CONTROL LEVER**
for UGOLINI GIANTGL

UGOLINI 22800-14910

1357035 **TAP CONTROL LEVER**
for UGOLINI MTGL-ITGL-ITGLS

UGOLINI 22800-27400

1357036 **TAP CONTROL LEVER**
for UGOLINI ARCTIC COMPACT 5/8
for UGOLINI ARCTIC COMPACT 12/20
for UGOLINI ARCTIC DELUXE 12/20

UGOLINI 22900-00501

1357040 **TAP CONTROL LEVER**
for UGOLINI MINIGEL

UGOLINI 2Q000-01500

1357041 **TAP CONTROL LEVER PIN**
for UGOLINI MINIGEL

UGOLINI 2Q000-05300

1357038 **TAP FLOW REDUCER**
for UGOLINI MTMINI-MTGL-GIANTGL-ITGL-ITGLS

UGOLINI 22800-24900

1357042 **TAP FLOW REDUCER**
for UGOLINI MINIGEL

UGOLINI 2Q000-01000

1199106 **TAP FORK**
for UGOLINI HT10-HT11-HT20

UGOLINI 02800-02501 UGOLINI 22800-02501

UGOLINI

Suitable for:

1199134 **TAP GREY COVER**
for UGOLINI HT10-HT11-HT20

UGOLINI 02800-04400 UGOLINI 22800-04400

Suitable for:

1199099 **TAP LEVER**
for UGOLINI CADDY5/2-CADDY5/3-CADDY5/4
for UGOLINI CADDY7/1-CADDY10/1-CADDY10/2
for UGOLINI HT11-HT20

UGOLINI 02800-02303 UGOLINI 22800-02303

1199107 **TAP LEVER**
for UGOLINI HT10-HT11-HT20

UGOLINI 02800-02302 UGOLINI 22800-02302

1199139 **TAP LEVER**
for UGOLINI CADDY5/2-CADDY5/3-CADDY5/4
for UGOLINI CADDY7/1-CADDY10/1-CADDY10/2

UGOLINI 21701-00001

1199112 **TAP PISTON**
for UGOLINI DELICE OLD-DELICE NEW-DELICE 3Lt

UGOLINI 02800-14801 UGOLINI 22800-14801

1357039 **TAP PISTON**
for UGOLINI MINIGEL

UGOLINI 2Q000-01600

Drain hoses

1450008 **PUMP OUTLET PIPE 182 mm 12 L**
for Frigo drink (UGOLINI) ARCTIC DELUXE12

UGOLINI 22900-00201

1450009 **PUMP OUTLET PIPE 287 mm 20 L**
for Frigo drink (UGOLINI) ARCTIC DELUXE20

UGOLINI 22900-00200

Drip tanks

1199037 **CAP WITH LIGHT HT-MT**
upper part

UGOLINI 02800-17000 UGOLINI 22800-17000

1199118 **COMPLETE CONTAINER**
for Chocolate maker (UGOLINI) DELICEOLD

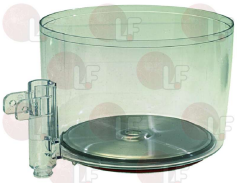

UGOLINI 33800-09901

UGOLINI

Suitable for:

1199030 **CONTAINER FOR GRANITA MACHINE 10 l**
for Granita machine (UGOLINI) ITGL - ITGLS - MTGL

UGOLINI 02800-17400 UGOLINI 22800-17400 UGOLINI 22800-17404

1199127 **CONTAINER 10 L**
for Frigo drink (UGOLINI) CADDY10/1 - CADDY10/2

UGOLINI 02800-18720 UGOLINI 22800-18720

1199129 **CONTAINER 11 L**
for Frigo drink (UGOLINI) HT11

UGOLINI 02800-12600 UGOLINI 22800-12600

1199137 **CONTAINER 5 L TAP WITH RUBBER PART**
for Frigo drink (UGOLINI) CADDY5/2 - CADDY5/3
CADDY5/4

UGOLINI 03800-05610 UGOLINI 33800-05610

1199055 **COVER WITH LIGHT HT-MT GLS**

UGOLINI 03800-04804 UGOLINI 33800-04804

Suitable for:

1199144 **CONTAINER LID**
for Frigo drink (UGOLINI) CADDY10/1 - CADDY10/2
CADDY7/1

UGOLINI 01980-00000 UGOLINI 21980-00000

1199130 **CONTAINER 10 L**
for Frigo drink (UGOLINI) HT10

UGOLINI 02800-11100 UGOLINI 22800-11100

1199128 **CONTAINER 20 L**
for Frigo drink (UGOLINI) HT20

UGOLINI 02800-01600 UGOLINI 22800-01600

1199136 **COVER**
for Frigo drink (UGOLINI) CADDY5/2 - CADDY5/3
CADDY5/4

UGOLINI 02800-09110 UGOLINI 22800-09110

1199126 **COVER 20 L**
for Frigo drink (UGOLINI) HT20

UGOLINI 02800-00703 UGOLINI 22800-00703

UGOLINI

Suitable for:

1521010 FRIGODRINK TANK 12 L
for pump version
for Frigo drink (UGOLINI) ARTIC DELUXE12

UGOLINI 22900-00000

Suitable for:

1521009 FRIGODRINK TANK 20 L
for pump version
for Frigo drink (UGOLINI) ARTIC DELUXE20

UGOLINI 22900-04800

1521008 FRIGODRINK TANK 5 L
for Frigo drink (UGOLINI) ARTIC COMPACT5

UGOLINI 22900-01910 UGOLINI 22900-01911

1521007 GRANITA MACHINE TANK 15 L
for Granita machine (UGOLINI) GIANTGL

UGOLINI 22800-17403

1521006 GRANITA MACHINE TANK 6 L
for Granita machine (UGOLINI) MTMINI

UGOLINI 22700-00200

1199125 LID 11 L
for Frigo drink (UGOLINI) HT11

UGOLINI 02800-20600 UGOLINI 22800-20600 UGOLINI 22900-02200

1199014 SET COVER WITH LIGHT

UGOLINI 03800-04800 UGOLINI 33800-04800

1521011 TANK COVER
dimensions 380x120 mm
for Frigo drink (UGOLINI) ARTIC COMPACT5
ARTIC COMPACT8

UGOLINI 22900-01300

1521012 TANK COVER
dimensions 468x175 mm
for Frigo drink (UGOLINI) ARTIC COMPACT12
ARTIC COMPACT20 - ARTIC DELUXE12
ARTIC DELUXE20

UGOLINI 22900-00100 UGOLINI 22900-00101

1199116 TRANSPARENT CONTAINER
for Chocolate maker (UGOLINI) DELICENEW
DELICEOLD

UGOLINI 02800-26405 UGOLINI 22800-26405

UGOLINI

Suitable for:

1199038 **TRANSPARENT COVER**
for Granita machine (UGOLINI) ITGL - ITGLS - MTGL

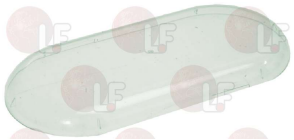

UGOLINI 02800-23400 UGOLINI 22800-23400

Suitable for:

1199146 **5 L CONTAINER FOR GRAVITY TAP**
for Frigo drink (UGOLINI) CADDY5/2 - CADDY5/3
CADDY5/4

UGOLINI 03800-05616 UGOLINI 33800-05616

Drip trays for coffee and bar

1199010 **DRIP TRAY**
for Frigo drink (UGOLINI) CADDY10/1 - CADDY10/2
CADDY5/2 - CADDY5/4 - CADDY7/1 - HT10 - HT11
HT20

UGOLINI 02800-00600 UGOLINI 22800-00600

1015046 **DRIP TRAY GRID**
for Frigo drink (UGOLINI) ARTIC COMPACT12
ARTIC COMPACT20 - ARTIC DELUXE12
ARTIC DELUXE20
for Granita machine (UGOLINI) ITGL - ITGLS - MTGL
MTMINI

UGOLINI 22900-03700

1015047 **DRIP TRAY GRID**
for Frigo drink (UGOLINI) ARTIC COMPACT5
ARTIC COMPACT8 - CADDY5/3

UGOLINI 22800-00510

1199043 **DRIP TRAY GRID**
for Frigo drink (UGOLINI) ARTIC COMPACT5
ARTIC COMPACT8 - CADDY10/1 - CADDY10/2
CADDY5/2 - CADDY5/4 - CADDY7/1 - HT10 - HT11
HT20

UGOLINI 02800-00500 UGOLINI 22800-00500

1199070 **DRIP TRAY GRID**
for Frigo drink (UGOLINI) A12 - A19
for Granita machine (UGOLINI) ITGL - ITGLS - MTGL

UGOLINI 02800-00503 UGOLINI 22800-00503

UGOLINI

Suitable for:

1015044 **GREY DRIPPING TRAY**
for Frigo drink (UGOLINI) ARTIC COMPACT12
ARTIC COMPACT20 - ARTIC DELUXE12
ARTIC DELUXE20
for Granita machine (UGOLINI) ITGL - ITGLS - MTGL
MTMINI

UGOLINI 22900-03800

Suitable for:

1015046 **DRIP TRAY GRID**
for Frigo drink (UGOLINI) ARTIC COMPACT12
ARTIC COMPACT20 - ARTIC DELUXE12
ARTIC DELUXE20
for Granita machine (UGOLINI) ITGL - ITGLS - MTGL
MTMINI

UGOLINI 22900-03700

1015045 **GREY DRIPPING TRAY**
for Granita machine (UGOLINI) ITGL - ITGLS - MTGL

UGOLINI 02800-00603 UGOLINI 22800-00603 UGOLINI 22800-00605

Electronic printed-circuit boards

5018541 **DELAYER FOR 1 TANK**
230V 50/60Hz
coupling connection
for Granita machine (UGOLINI) MT1GLS

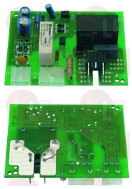

UGOLINI 02800-05251 UGOLINI 22800-05251

5046823 **DELAYER FOR 1 TANK 22700-00610**
230V 50Hz
for Granita machine (UGOLINI) MTMINIETC

UGOLINI 22700-00610

1199031 **DELAYER FOR 2 TANKS**
230V 50/60Hz
faston connection
for Granita machine (UGOLINI) MTGL20LD

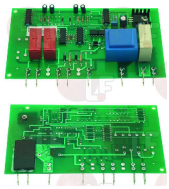

UGOLINI 01299-00002 UGOLINI 21299-00002

5018343 **DELAYER FOR 2 TANKS**
230V 50/60Hz
faston connection
for Granita machine (UGOLINI) MT2GLS

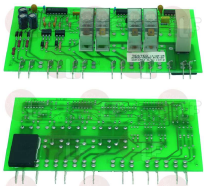

UGOLINI 22800-05201

UGOLINI

Suitable for:

5023664 **DELAYER FOR 2/3 TANKS J423231C**
230V 50/60Hz
coupling connection
for Granita machine (UGOLINI) MT2GLS - MT3GLS

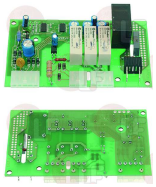

UGOLINI 02800-05252 UGOLINI 02800-05253 UGOLINI 22800-05252
UGOLINI 22800-05253

Suitable for:

1199012 **DELAYER FOR 3 TANKS**
230V 50/60Hz
faston connection
for Granita machine (UGOLINI) MTGL30LD

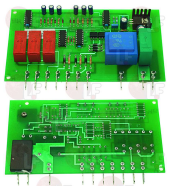

UGOLINI 01299-00003 UGOLINI 21299-00003

5018342 **DELAYER FOR 3 TANKS**
230V 50/60Hz
faston connection
for Granita machine (UGOLINI) MT3GLS

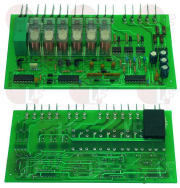

UGOLINI 22800-05202

5032475 **DISPLAY BOARD 22700-00640**
for Granita machine (UGOLINI) MTMINIETC

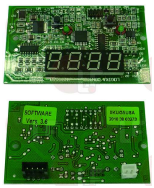

UGOLINI 22700-00640

1199150 **ELECTRONIC DELAY SWITCH 230V 50Hz**
for Granita machine (UGOLINI) MTMINI

UGOLINI 22700-00600

1199033 **ELECTRONIC DELAYER 115V 60Hz**
for Granita machine (UGOLINI) GIANTGL - MTGL

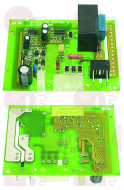

UGOLINI 22800-05240

Feet

1313029 **FOOT ø 40 mm M8**
for Frigo drink (UGOLINI) ARCTIC DELUXE12
ARCTIC DELUXE20 - A12 - A19 - CADDY10/1
CADDY10/2 - CADDY5/2 - CADDY5/3 - CADDY5/4
CADDY7/1 - HT10 - HT11 - HT20
for Granita machine (UGOLINI) ARCTIC COMPACT12
ARCTIC COMPACT20 - ARCTIC COMPACT5
ARCTIC COMPACT8 - GIANTGL - ITGL - ITGLS
MINIGEL - MTGL - MTMINI

UGOLINI 02800-10000 UGOLINI 22800-10000

UGOLINI

Suitable for:

Suitable for:

Filters

1160077 **FILTER FOR CONDENSER**
dimensions 305x295 mm
for Granita machine (UGOLINI) GIANTGL

UGOLINI 10028-00906

1199131 **FILTER FOR CONDENSER**
for Granita machine (UGOLINI) ITGL - ITGLS - MTGL

UGOLINI 00028-00905 UGOLINI 10028-00905

Gaskets and seals

1199054 **ANTI-CONDENSATE GASKET**
for Granita machine (UGOLINI) GIANTGL - ITGL
ITGLS - MTGL

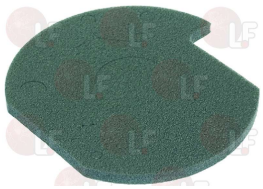

UGOLINI 00570-13602 UGOLINI 10570-13602

1786249 **ANTI-CONDENSATE GASKET**
for UGOLINI GIANTGL

UGOLINI 10570-13606

1199007 **BACK GASKET**

UGOLINI 03800-08600 UGOLINI 33800-08600

1786244 **CAP GASKET ø 57x28x10 mm**
for UGOLINI MINIGEL

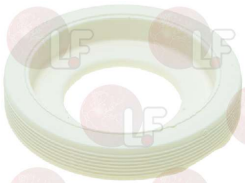

UGOLINI 2Q000-06300

1786248 **EVAPORATOR FRONT GASKET**
for UGOLINI MINIGEL-MTMINI

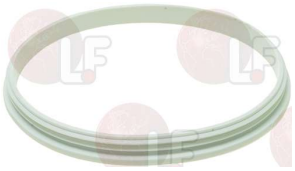

UGOLINI 22700-00000

1786245 **EVAPORATOR REAR GASKET**
for UGOLINI MINIGEL-MTMINI

UGOLINI 22700-00100

UGOLINI

Suitable for:

1199005 GASKET

for Frigo drink (UGOLINI) ARTIC COMPACT12
ARTIC COMPACT20 - ARTIC COMPACT5
ARTIC COMPACT8 - ARTIC DELUXE12
ARTIC DELUXE20 - CADDY5/2 - CADDY5/3
CADDY5/4
for Granita machine (UGOLINI) ITGL - ITGLS - MTGL
MTMINI

UGOLINI 02800-17200 UGOLINI 22800-17200

Suitable for:

1199085 GASKET FOR CONTAINER

for Frigo drink (UGOLINI) HT10 - HT11 - HT20

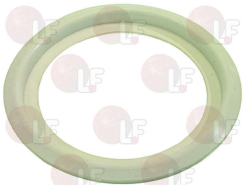

UGOLINI 01214-00000 UGOLINI 21214-00000

1186054 GASKET FOR TANK

for Chocolate maker (UGOLINI) DELICENEW
DELICEOLD

UGOLINI 02800-26410 UGOLINI 22800-26410

1199117 O-RING FOR CONTAINER

for Chocolate maker (UGOLINI) DELICENEW
DELICEOLD

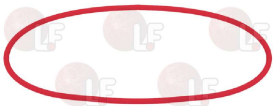

UGOLINI 02800-26418 UGOLINI 22800-26418

1199001 O-RING 0123 WHITE SILICONE

for dispenser tap
for Chocolate maker (UGOLINI) DELICENEW
DELICEOLD - DELICE3LT
for Granita machine (UGOLINI) GIANTGL - ITGL
ITGLS - MTGL - MTMINI

UGOLINI 02800-15100 UGOLINI 22800-15100

3243139 O-RING 02025 EPDM

UGOLINI 02040-00000 UGOLINI 22040-00000

1186411 O-RING 02031 EPDM

UGOLINI 00028-03217 UGOLINI 10028-03217

3243191 O-RING 02125 EPDM

UGOLINI 07109-00000 UGOLINI 27109-00000

1186053 O-RING 03081 WHITE SILICONE

for mixing shaft
for Chocolate maker (UGOLINI) DELICEOLD

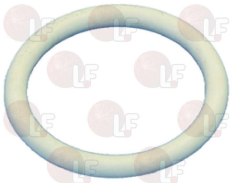

UGOLINI 02800-26419 UGOLINI 22800-26419

1786243 O-RING 03106 WHITE SILICONE

for mixer shaft
for UGOLINI DELICE NEW-DELICE 3Lt

UGOLINI 22500-01302

UGOLINI

Suitable for:

1199075 **O-RING 03231 RED SILICONE**
for gear motor flange
for Granita machine (UGOLINI) GIANTGL - ITGL
ITGLS - MTGL

UGOLINI 00028-02804 UGOLINI 10028-02804

Suitable for:

1786246 **O-RING 06337 RED SILICONE**
for UGOLINI MINIGEL-MTMINI

UGOLINI 22700-02300

5018347 **ORM GASKET 0080-20 WHITE SILICONE**

UGOLINI 02800-22619 UGOLINI 10028-03212

1786247 **RETAINER SPRING RING ø 20x11x5 mm**
for UGOLINI MINIGEL

UGOLINI 02800-22615 UGOLINI 22800-22615

1186052 **SEALING GASKET**
for Frigo drink (UGOLINI) CADDY10/1 - CADDY10/2
CADDY7/1

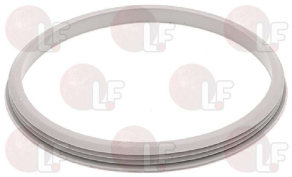

UGOLINI 02081-00001 UGOLINI 22081-00001

1186050 **SPRING RETAINING RUBBER PIECE**
for Frigo drink (UGOLINI) CADDY10/1 - CADDY10/2
CADDY5/2 - CADDY5/3 - CADDY5/4 - CADDY7/1

UGOLINI 01704-00000 UGOLINI 21704-00000

1786242 **TANK GASKET**
for UGOLINI MINIGEL

UGOLINI 2Q000-05100

1786241 **TANK GASKET 15L**
for UGOLINI GIANTGL

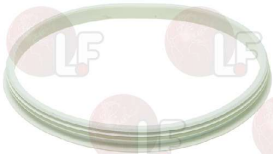

UGOLINI 22800-17201

1199097 **TAP GASKET**
for Frigo drink (UGOLINI) ARTIC COMPACT12
ARTIC COMPACT20 - ARTIC COMPACT5
ARTIC COMPACT8 - ARTIC DELUXE12
ARTIC DELUXE20 - CADDY10/1 - CADDY10/2
CADDY5/2 - CADDY5/3 - CADDY5/4 - CADDY7/1
HT11 - HT20

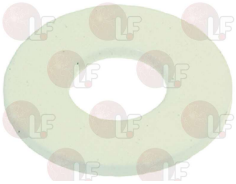

UGOLINI 00028-02500 UGOLINI 10028-02500

UGOLINI

Suitable for:

Suitable for:

Gears

1199068 FIRST GEARWHEEL FOR GEAR MOTOR

UGOLINI 02800-22639 UGOLINI 22800-22639

1199065 FOURTH GEARWHEEL FOR GEAR MOTOR

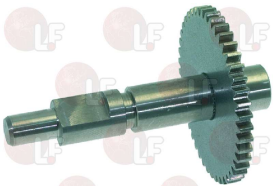

UGOLINI 02800-22650 UGOLINI 22800-22650

1199078 IMPELLER SHAFT FOR PUMP
for Frigo drink (UGOLINI) HT11 - HT20

UGOLINI 02800-03000 UGOLINI 22800-03000

1199019 PINION FOR GEAR MOTOR

UGOLINI 02800-22634 UGOLINI 22800-22634

1199069 SECOND GEARWHEEL FOR GEAR MOTOR

UGOLINI 02800-22640 UGOLINI 22800-22640

1199064 THIRD GEARWHEEL FOR GEAR MOTOR

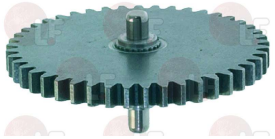

UGOLINI 02800-22611 UGOLINI 22800-22611

Inlet hoses

1199090 ANTIFOAM PIPE
for Frigo drink (UGOLINI) HT20

UGOLINI 02800-01400 UGOLINI 22800-01400

1199091 ANTIFOAM PIPE
for Frigo drink (UGOLINI) HT11

UGOLINI 02800-23100 UGOLINI 22800-23100

1199142 L-ARM FOR 11/20 L CONTAINER
for Frigo drink (UGOLINI) HT11 - HT20

UGOLINI 02800-01200 UGOLINI 22800-01200

1199135 OUTLET TUBE
for Frigo drink (UGOLINI) HT20

UGOLINI 02800-01300 UGOLINI 22800-01300

1199141 **OUTLET TUBE**
for Frigo drink (UGOLINI) HT11

UGOLINI 02800-21500 UGOLINI 22800-21500

Ironmongery (screws,nuts,washers)

1199018 **WASHER FOR GEAR MOTOR**

UGOLINI 00028-03201 UGOLINI 10028-03201

1199049 **WASHER FOR MAGNETIC MOTOR**
for UGOLINI MTGL-GIANTGL-ITGL-ITGLS

UGOLINI 00028-02805 UGOLINI 10028-02805

1199021 **WASHER 4x8x0.2 mm FOR GEAR MOTOR**

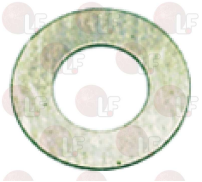

UGOLINI 00028-03205 UGOLINI 10028-03205

Knobs

1199053 **KNOB FOR THERMOSTAT**
for Granita machine (UGOLINI) GIANTGL - ITGL
ITGLS - MTGL - MTMINI

UGOLINI 02800-14500 UGOLINI 22800-14500

Lamps

1221008 **LAMP 28V**
for Frigo drink (UGOLINI) ARCTIC DELUXE12
ARCTIC DELUXE20 - HT10
for Granita machine (UGOLINI) ITGL - ITGLS - MTGL

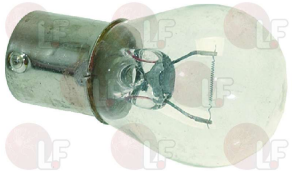

UGOLINI 00028-03800 UGOLINI 10028-03800

1199073 **ORANGE INDICATOR LIGHT 110V**
head ø 15 mm - hole ø 13 mm
for Granita machine (UGOLINI) MT1P - MT2

UGOLINI 02800-07511 UGOLINI 22800-07511

UGOLINI

Suitable for:

1199074 **ORANGE INDICATOR LIGHT 24V**
head ø 15 mm - hole ø 13 mm
for Granita machine (UGOLINI) MT1P - MT2 - MT3GLS

UGOLINI 02800-07512 UGOLINI 22800-07512

Suitable for:

3221024 **RED INDICATOR LAMP 230V**
head ø 15 mm - hole ø 13 mm - 120°C
universal application

UGOLINI 02800-07510 UGOLINI 22800-07510

Microswitches

3240123 **MICROSWITCH 16A 250V**
for Granita machine (UGOLINI) GIANTGL - MTGL
MTMINI
for Ice crusher (SANTOS) 9
for Mixer (ROBOT COUPE) MP350 - MP450 - MP550
MP550A - MP600 - MP600A

UGOLINI 02800-09301 UGOLINI 22800-09301

1199023 **RUBBER PIECE WITH LAMP CONTACT**
for UGOLINI MTGL-GIANTGL-ITGL-ITGLS-HT10

UGOLINI 02800-22801 UGOLINI 22800-22801 UGOLINI 22800-22805

Motors

1240174 **AXIAL FAN 60x60x25 mm 24VDC**
24VDC 0.15A 3.6W 4500rpm - with bushing
for Granita machine (UGOLINI) MINIGEL

UGOLINI 22600-01000 UGOLINI 33600-01000

3240501 **AXIAL VENTILATOR SUNON 120x120x38 mm**
ball bearings
22W 230V 50/60Hz 2850 Rpm
DP200A 2123XBT.GN
for Granita machine (UGOLINI) MINIGEL - MTMINI

UGOLINI 22800-07600 UGOLINI 33800-06900

1199025 **COMPLETE BRIDGE OVER NEW MODEL**
for Granita machine (UGOLINI) ITGL - ITGLS - MTGL
MTMINI

UGOLINI 02800-22651 UGOLINI 22800-22651

1240373 **EXHAUST ø 170 mm 40°**
for Frigo drink (UGOLINI) ARTIC COMPACT5
ARTIC COMPACT8

UGOLINI 22900-00401

UGOLINI

Suitable for:

1240500 **GEAR MOTOR 115V 60Hz**
for Granita machine (UGOLINI) ITGL - ITGLS - MTGL

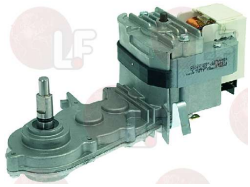

UGOLINI 03800-04771 UGOLINI 33800-04771

1240501 **GEAR MOTOR 230V 50Hz**
for Granita machine (UGOLINI) ITGL - ITGLS - MTGL

UGOLINI 03800-04770 UGOLINI 33800-04770

5025506 **GEAR MOTOR 230V 50Hz**
for Granita machine (UGOLINI) MTMINI

UGOLINI 33700-00000 UGOLINI 33700-00010

3340172 **GEARMOTOR FIBER GE15J0BAHDC**
230V 50Hz 33rpm
for Frigo drink (UGOLINI) ARTIC DELUXE12
ARTIC DELUXE20 - HT10 - HT11 - HT20

UGOLINI 33800-06700

1199050 **MAGNETIC ROTOR**
for Granita machine (UGOLINI) GIANTGL - ITGL
ITGLS - MTGL - MTMINI

UGOLINI 03800-09601 UGOLINI 33800-09601

Suitable for:

1240516 **GEAR MOTOR 115V 60Hz**
for Chocolate maker (UGOLINI) DELICENEW
DELICEOLD - DELICE3LT

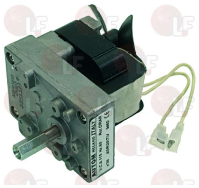

UGOLINI 22092-00004 UGOLINI 22092-00014

1240515 **GEAR MOTOR 230V 50Hz**
for Chocolate maker (UGOLINI) DELICENEW
DELICEOLD - DELICE3LT

UGOLINI 02092-00002 UGOLINI 22092-00002 UGOLINI 22092-00012

5029270 **GEAR MOTOR 230V 50Hz**
for Granita machine (UGOLINI) GIANTGL

UGOLINI 33800-04740

1240196 **GEARMOTOR 263D 24V 50rpm**
for soluble container

UGOLINI 22600-00800

1240372 **MAGNETIC ROTOR FOR SCROLL**
for Granita machine (UGOLINI) MTMINI

UGOLINI 33700-00760

UGOLINI

Suitable for:

1199089 **MOTOR BRACKET**
for Frigo drink (UGOLINI) ARTIC COMPACT12
ARTIC COMPACT20 - ARTIC COMPACT5
ARTIC COMPACT8 - ARTIC DELUXE12
ARTIC DELUXE20 - CADDY10/1 - CADDY10/2
CADDY5/2 - CADDY5/3 - CADDY5/4 - CADDY7/1
HT11 - HT20

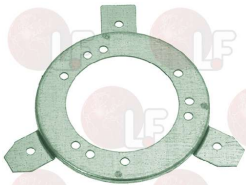

UGOLINI 02800-04800 UGOLINI 22800-04800

Suitable for:

1240510 **MOTOR EMI 11W 82CE-2011/1**
230V 50/60Hz 55W 1300rpm
for Frigo drink (UGOLINI) ARTIC COMPACT12
ARTIC COMPACT20 - ARTIC COMPACT5
ARTIC COMPACT8 - ARTIC DELUXE12
ARTIC DELUXE20 - CADDY5/2 - CADDY5/3
CADDY5/4 - HT11 - HT20

UGOLINI 02800-04705 UGOLINI 22800-04705 UGOLINI 22800-18920

1240514 **MOTOR EMI 16W 82CE-2516/4**
230V 50/60Hz 65W Input 1300rpm
for Frigo drink (UGOLINI) ARTIC COMPACT5
ARTIC COMPACT8

UGOLINI 02800-18980 UGOLINI 22800-18980

1240371 **MOTOR EMI 16W 82E-2516**
230V 50/60Hz 16W 0.45A 1300rpm
for Granita machine (UGOLINI) ITGL - ITGLS - MTGL
MTMINI

UGOLINI 33800-00600

1240369 **MOTOR EMI 20W 82-2516/32**
230V 50Hz 20W 0.60A 1300rpm
for Frigo drink (UGOLINI) ARTIC COMPACT5
ARTIC COMPACT8

UGOLINI 22900-03010

1240370 **MOTOR EMI 26W 83-2025/5**
220/230V 50/60Hz 26W 0.30A 1300rpm
for Frigo drink (UGOLINI) ARTIC COMPACT12
ARTIC COMPACT20

UGOLINI 22900-03000

1240506 **MOTOR FAN 10W 230/240V 50Hz**
for Frigo drink (UGOLINI) HT20/2 - HT20/3

UGOLINI 03800-00400 UGOLINI 33800-00400

1240512 **MOTOR GEAR CDC AT011 S80ES**
230V 50Hz 33rpm
for Frigo drink (UGOLINI) ARTIC DELUXE12
ARTIC DELUXE20 - A12 - A19 - HT10 - HT11
HT20

UGOLINI 33800-06702

UGOLINI

Suitable for:

1240119 **MOTOR MIXER 209D 24V 0.2A**
for mixer

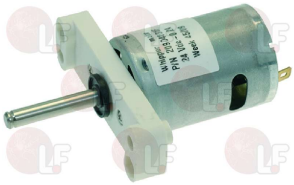

UGOLINI 22600-00902

Suitable for:

1199059 **ROTOR SPACER FOR GEAR MOTOR**
for Frigo drink (UGOLINI) A12 - A19
for Granita machine (UGOLINI) GIANTGL - ITGL
ITGLS - MTGL - MTMINI

UGOLINI 00028-03200 UGOLINI 02800-22623 UGOLINI 10028-03200

1199063 **SPACER 1.5 mm FOR GEAR MOTOR**

UGOLINI 00028-03202 UGOLINI 10028-03202

1199066 **SPACER 3.3 mm FOR GEAR MOTOR**

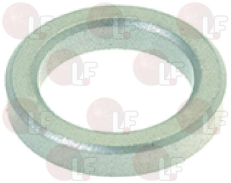

UGOLINI 00028-03203 UGOLINI 10028-03203

1240505 **SPECIAL EXHAUST FAN ø 230 mm**
for Frigo drink (UGOLINI) ARTIC DELUXE12
ARTIC DELUXE20
for Granita machine (UGOLINI) ITGL - ITGLS
MINIGEL - MTGL - MTMINI

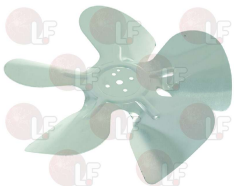

UGOLINI 02800-13200 UGOLINI 22800-13200

1199015 **STATOR 230V 50Hz**

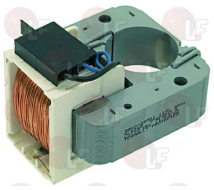

UGOLINI 02800-22500 UGOLINI 22800-22500

3240961 **SUCTION BLADE ø 170 mm 28°**

UGOLINI

3240222 **SUCTION BLADE ø 230 mm 28°**

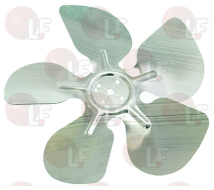

UGOLINI

3240964 **SUCTION BLADE ø 250 mm 28°**

UGOLINI

1199088 **4-POLE MOTOR MAGNET ø 7 mm**
for Frigo drink (UGOLINI) ARTIC COMPACT12
ARTIC COMPACT20 - ARTIC COMPACT5
ARTIC COMPACT8 - ARTIC DELUXE12
ARTIC DELUXE20 - CADDY10/1 - CADDY10/2
CADDY5/3 - CADDY7/1 - HT11 - HT20

UGOLINI 03800-00803 UGOLINI 33800-00803

UGOLINI

Suitable for:

3240211 **5-POLE MOTOR ELCO 10W**
230/240V 50/60Hz 1300Rpm - 38W Input
VN 10-20

UGOLINI

Suitable for:

3240902 **5-POLE MOTOR ELCO 16W**
230/240V 50/60Hz 1300Rpm - 65W Input
VN 16-25

UGOLINI

Paddles

1199132 **MIXER FOR HOT CHOCOLATE MAKER DELICE**
for Chocolate maker (UGOLINI) DELICENEW
DELICEOLD

UGOLINI 02800-26414 UGOLINI 22800-26414

Pins

1199102 **CENTRAL PIN**
for Frigo drink (UGOLINI) CADDY10/1 - CADDY10/2
CADDY5/2 - CADDY5/3 - CADDY5/4 - CADDY7/1

UGOLINI 02800-19900 UGOLINI 22800-19900

1324161 **PUMP CENTRAL PIN**
for Frigo drink (UGOLINI) ARCTIC DELUXE12
ARCTIC DELUXE20
for Granita machine (UGOLINI) ARCTIC COMPACT12
ARCTIC COMPACT20 - ARCTIC COMPACT5
ARCTIC COMPACT8

UGOLINI 22900-00600

1199140 **TRANSMISSION SHAFT**
for Chocolate maker (UGOLINI) DELICEOLD

UGOLINI 03800-09800 UGOLINI 33800-09800

1199044 **ZINC PLATED DENSITY ADJUSTING SCREW**
for Granita machine (UGOLINI) GIANTGL - MTGL
MTMINI

UGOLINI 02800-16700 UGOLINI 22800-16700

UGOLINI

Suitable for:

Suitable for:

Pressure switches

1199056 **SAFETY PRESSURE SWITCH**
for Granita machine (UGOLINI) ITGL - ITGLS

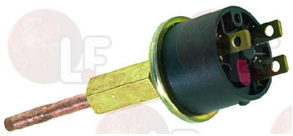

UGOLINI 02800-07503 UGOLINI 22800-07503 UGOLINI 22800-07505

Probes

1397056 **TEMPERATURE PROBE**
cable length 900 mm - bulb ø 4.5x25 mm
for UGOLINI MINIGEL

UGOLINI 22700-02900

Pulleys

1318001 **MAGNETIC PULLEY**
for Frigo drink (UGOLINI) ARTIC COMPACT12
ARTIC COMPACT20

UGOLINI 33900-01051

1199105 **MOTOR PULLEY ø 7 mm**
for Frigo drink (UGOLINI) ARTIC COMPACT12
ARTIC COMPACT20 - ARTIC COMPACT5
ARTIC COMPACT8 - CADDY5/2 - CADDY5/3
CADDY5/4

UGOLINI 02800-02201 UGOLINI 22800-02201

1199103 **PULLEY WITH BEARING**
with magnet and spacer
for Frigo drink (UGOLINI) CADDY5/2 - CADDY5/3
CADDY5/4

UGOLINI 03800-00811 UGOLINI 33800-00811 UGOLINI 33900-01050

UGOLINI

Suitable for:

Suitable for:

Pumps

1122012 **IMPELLER F/3-BLADES PUMP ø 56 mm 50/60Hz**
for Frigo drink (UGOLINI) ARTIC COMPACT12
ARTIC COMPACT20 - ARTIC COMPACT5
ARTIC COMPACT8

UGOLINI 33900-01201

1122011 **IMPELLER FOR 8-BLADES PUMP ø 56 mm 50Hz**
for Frigo drink (UGOLINI) ARTIC DELUXE12
ARTIC DELUXE20

UGOLINI 33900-01200

1122013 **IMPELLER FOR 8-BLADES PUMP ø 56 mm 60Hz**
for Frigo drink (UGOLINI) ARTIC DELUXE12
ARTIC DELUXE20

UGOLINI 33900-01204

1199076 **PUMP HOUSING**
for Frigo drink (UGOLINI) HT11 - HT20

UGOLINI 02800-02900 UGOLINI 22800-02900

1199101 **PUMP IMPELLER FOR CADDY 10 L**

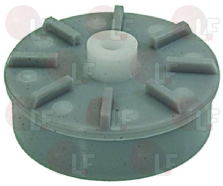

UGOLINI 03800-05401 UGOLINI 33800-05403

1199094 **PUMP IMPELLER WITH LOW WINGS**
for Frigo drink (UGOLINI) CADDY5/2 - CADDY5/3
CADDY5/4 - CADDY7/1

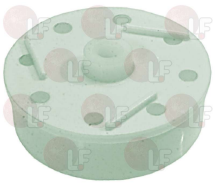

UGOLINI 03800-05404 UGOLINI 33800-05401

1199100 **PUMP IMPELLER 115/220V 60Hz**
for Frigo drink (UGOLINI) HT11 - HT20

UGOLINI 03800-05402 UGOLINI 33800-05404

1199093 **PUMP IMPELLER 230/240V 50Hz**
for Frigo drink (UGOLINI) HT11 - HT20

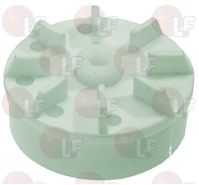

UGOLINI 03800-05400 UGOLINI 33800-05400

Rating-plates

1399013 **PICTURE FOR TAP LEVER**
for Frigo drink (UGOLINI) ARTIC COMPACT12
ARTIC COMPACT20 - ARTIC COMPACT5
ARTIC COMPACT8 - ARTIC DELUXE12
ARTIC DELUXE20

UGOLINI 10029-00000

Scrolls

1199035 EXTERNAL MIXER

UGOLINI 02800-16100 UGOLINI 02800-16101 UGOLINI 22800-16101

1719062 GRANITA MACHINE SCROLL ø 140x300 mm 6 L
for UGOLINI MTMINI

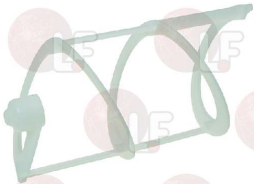

UGOLINI 22700-00300

1719063 GRANITA MACHINE SCROLL ø 188x350 mm 15 L
for UGOLINI GIANTGL

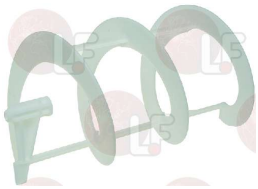

UGOLINI 22800-16105

1199022 INNER SCRAPER FINAL PORTION

UGOLINI 02800-15900 UGOLINI 22800-15900

1199041 INTERNAL MIXER
overall length 332 mm
for UGOLINI MTGL-GIANTGL-ITGL-ITGLS

UGOLINI 33800-08001 UGOLINI 33800-08002

1199034 INTERNAL SCRAPER ELEMENT

UGOLINI 02800-15800 UGOLINI 22800-15800

1199026 MAGNETIC EXTERNAL MIXER
for UGOLINI MTGL-ITGL-ITGLS

UGOLINI 02800-16102 UGOLINI 22800-16102

1199133 SCROLL FASTENING PLATE
for UGOLINI CADDY5/2-CADDY5/3-CADDY5/4
for UGOLINI CADDY7/1-CADDY10/1-CADDY10/2

UGOLINI 01983-00000 UGOLINI 21983-00000

1199138 SCROLL FOR PUMP
for UGOLINI CADDY5/2-CADDY5/3-CADDY5/4

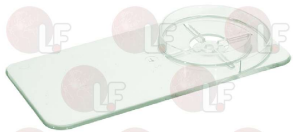

UGOLINI 02800-18810 UGOLINI 22800-18810

1199145 SCROLL FOR PUMP
for UGOLINI CADDY7/1-CADDY10/1-CADDY10/2

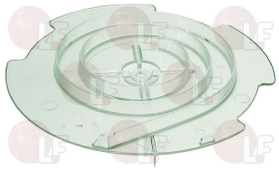

UGOLINI 02800-18800 UGOLINI 22800-18800

UGOLINI

Suitable for:

Suitable for:

1719064 **SOFT ICE SCROLL ø 139x310 mm**
for UGOLINI MINIGEL

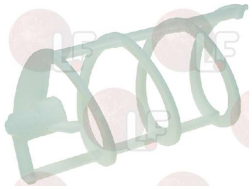

UGOLINI 2Q000-02500

Solenoid valves

5500721 **COIL PARKER WB4.5 6W 115V 50/60Hz**
width 22 mm - height 30 mm
depth 32 mm

UGOLINI 22800-23741

1120362 **COIL PARKER WB4.5 6W 220/230V 50/60Hz**
length 22 mm - height 30,5 mm
depth 32,5 mm

UGOLINI 22800-23740

Springs

1250336 **DISPENSER TAP SPRING**
for UGOLINI MTMINI-MTGL-GIANTGL-ITGL-ITGLS

UGOLINI 22800-15002

1250337 **DISPENSER TAP SPRING**
for UGOLINI MINIGEL

UGOLINI 2Q000-02100

1199045 **GREY SPRING GUIDE**

UGOLINI 02800-16900 UGOLINI 22800-16900

1250335 **LIGHT CONTACT SPRING**
for UGOLINI GIANTGL

UGOLINI 22800-15203

1199143 **NON-RETURN SPRING**
for UGOLINI HT11-HT20

UGOLINI 02800-03100 UGOLINI 22800-03100

1199046 **SPRING FOR DENSITY ADJUSTMENT**
for UGOLINI MTMINI-MTGL-GIANTGL

UGOLINI 02800-16800 UGOLINI 22800-16800

UGOLINI

Suitable for:

1199013 **SPRING FOR LAMP CONTACT**
for UGOLINI MTGL-ITGL-ITGLS

UGOLINI 22800-15200 UGOLINI 22800-15202

Suitable for:

1199084 **SPRING FOR TAP**
for UGOLINI ARCTIC COMPACT 5/8
for UGOLINI ARCTIC COMPACT 12/20
for UGOLINI ARCTIC DELUXE 12/20
for UGOLINI HT10-HT11-HT20

UGOLINI 02800-02600 UGOLINI 22800-02600

1199003 **SPRING FOR TAP HANDLE**

UGOLINI 02800-15000 UGOLINI 22800-15000

1250600 **TAP SPRING**
for UGOLINI CADDY5/2-CADDY5/3-CADDY5/4
for UGOLINI CADDY7/1-CADDY10/1-CADDY10/2

UGOLINI 01705-00000 UGOLINI 21705-00000

1250601 **TAP SPRING**
for UGOLINI DELICE OLD-DELICE NEW-DELICE 3Lt

UGOLINI 22800-26424

Switches

1199081 **PROTECTION FOR SWITCH**
for Frigo drink (UGOLINI) ARTIC COMPACT12
ARTIC COMPACT20 - ARTIC COMPACT5
ARTIC COMPACT8 - ARTIC DELUXE12
ARTIC DELUXE20 - A12 - A19 - CADDY10/1
CADDY10/2 - CADDY5/2 - CADDY5/3 - CADDY5/4
CADDY7/1 - HT10 - HT11 - HT20

UGOLINI 02800-05100 UGOLINI 22800-05100

1199042 **WHITE SINGLE-POLE SWITCH 16A 250V**
silk-screen printing 0 - I
temperature max 120°C
mounting hole 11x30 mm
for Granita machine (UGOLINI) GIANTGL - MINIGEL
MTGL - MTMINI

UGOLINI 02800-24300 UGOLINI 22800-24300

UGOLINI

Suitable for:

1199079 **WHITE SINGLE-POLE SWITCH 16A 250V**

silk-screen printing 0 - I
temperature max 120°C
mounting hole 11x30 mm
for Frigo drink (UGOLINI) ARTIC COMPACT12
ARTIC COMPACT20 - ARTIC COMPACT5
ARTIC COMPACT8 - ARTIC DELUXE12
ARTIC DELUXE20 - CADDY10/1 - CADDY10/2
CADDY5/2 - CADDY5/3 - CADDY5/4 - CADDY7/1
HT10 - HT11 - HT20

UGOLINI 01125-00000 UGOLINI 21125-00000

Suitable for:

1199080 **WHITE THREE-POLE SWITCH 10A 120V**

silk-screen printing II - I - 0
mounting hole 13x28 mm
for Frigo drink (UGOLINI) A12 - A19 - HT10

UGOLINI 01989-00000 UGOLINI 21989-00000

1199027 **WHITE THREE-POLE SWITCH 16A 250V**

silk-screen printing I - 0 - II
temperature max. 120°C
mounting hole 22x30 mm
for Granita machine (UGOLINI) GIANTGL - MTGL
MTMINI

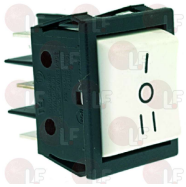

UGOLINI 02800-24200 UGOLINI 22800-24200

Thermostats

1199052 **MODIFIED THERMOSTAT RANCO K50 L3212**

2 contacts 6A 250V
capillary length 800 mm
for Granita machine (UGOLINI) GIANTGL - ITGL
ITGLS - MTGL

UGOLINI 03800-08300 UGOLINI 33800-08300

1199086 **THERMOSTAT RANCO K50 L3212**

2 contacts 6A 250V
for Frigo drink (UGOLINI) CADDY10/1 - CADDY10/2
CADDY7/1 - HT10 - HT11 - HT20
for Granita machine (UGOLINI) MTMINI

UGOLINI 01087-00001 UGOLINI 21087-00001

1199087 **THERMOSTAT RANCO K50 L3218**

2 contacts 6A 250V
for Frigo drink (UGOLINI) ARTIC COMPACT12
ARTIC COMPACT20 - ARTIC COMPACT5
ARTIC COMPACT8 - ARTIC DELUXE12
ARTIC DELUXE20 - CADDY5/2 - CADDY5/3
CADDY5/4 - HT10 - HT11 - HT20

UGOLINI 01087-00000 UGOLINI 21087-00000

1444109 **THERMOSTAT TR2 0+90°C COMPLETE**

for Chocolate maker (UGOLINI) DELICENEW
DELICEOLD - DELICE3L

UGOLINI 02037-00000 UGOLINI 22037-00000

UGOLINI

Suitable for:

Suitable for:

1444009 **THERMOSTAT 0-120°C**

bulb ø 6x90 mm
for Chocolate maker (UGOLINI) DELICEOLD

UGOLINI 22037-00001

The data herewith contained may change without notice and LF SpA cannot be held responsible for possible errors stated or resulting by the use of this document. All rights reserved. No part of this publication may be reproduced without written permission by LF SpA.

LF SpA
via Voltri, 80 - 47522 Cesena (FC) ITALIA
Tel. +39 0547 34 11 11 - Fax +39 0547 34 11 10
www.lfricambi724.it - www.lfricambi724.mobi
info@lfricambi.it
Export Dept.: Tel. +39 0547 34 11 50 - Fax: +39 0547 34 11 55
www.lfspareparts724.com - www.lfspareparts724.mobi
export@lfspareparts.com

FRANCE
EPGC Sas
13, Rue des Forts - 59960 Neuville en Ferrain
Tél. +33 (0)3 20 25 06 21
Fax +33 (0)3 20 25 34 12
www.epgc.com
www.epgc724.mobi
epgc@epgc.com

DEUTSCHLAND
LF GmbH
Junkersstrasse, 1 - D-82178 Puchheim - München
Tel. +49 89 89 45 78 66
Fax +49 89 89 45 78 88
www.lfersatzteile724.de
www.lfersatzteile724.mobi
info@lfersatzteile.de

SCHWEIZ
LF GmbH Verkaufsbüro
Sennweidstrasse, 45 - CH-6312 Steinhausen
Tel. +41 (0)41 760 15 80-1
Fax +41 (0)41 760 15 85
www.lfersatzteile724.ch
www.lfersatzteilech724.mobi
info@lfersatzteile.ch

ESPAÑA
LF Repuestos Horeca S.L.U.
Calle Ciudad Real, 10 - 45517 Escalonilla - Toledo
Tlf. +34 91 477 91 00
Fax +34 91 477 90 81
www.lfrepuestos724.es
www.lfrepuestos724.mobi
info@lfrepuestos.es

UNITED KINGDOM
LF Spare Parts Ltd.
A10a Lakeside Business Park, Broadway Lane
South Cerney, Gloucestershire GL7 5XL
Tel. +44 (0)1285 86 16 25
Fax +44 (0)1285 86 39 49
www.lfspareparts724.co.uk
www.lfspareparts724.mobi
info@lfspareparts.co.uk

RUSSIA
OOO LF
ul, Anatoliya Zhivova, 8 - office 1 - 123100 Moscow
Tel. +7 499 259 85 75
Fax +7 495 725 26 53
www.lfspareparts724.ru
www.lfspareparts724.mobi
info@lfspareparts.ru

CHINA
LF China
Room 102, House 8, Lane 725, Mao Tai Rd.
Changning Dist. - 200336 Shanghai
Tel. +86 (0)21 33 53 66 31
Fax +86 (0)21 33 53 66 32
www.lfspareparts724.com
www.lfspareparts724.mobi
china@lfspareparts.com