Spare parts for:

Espresso coffee machines

Suitable for:

GRIMAC

This catalogue is automatically generated.
Therefore, the sequence of the items might not be always shown at best.
Updates will be issued in case of additions and/or amendments.
*Suitable **universal spare parts** may not be included*

Rel. 2015-06111731

POD COFFEE MACHINE NUVOLA

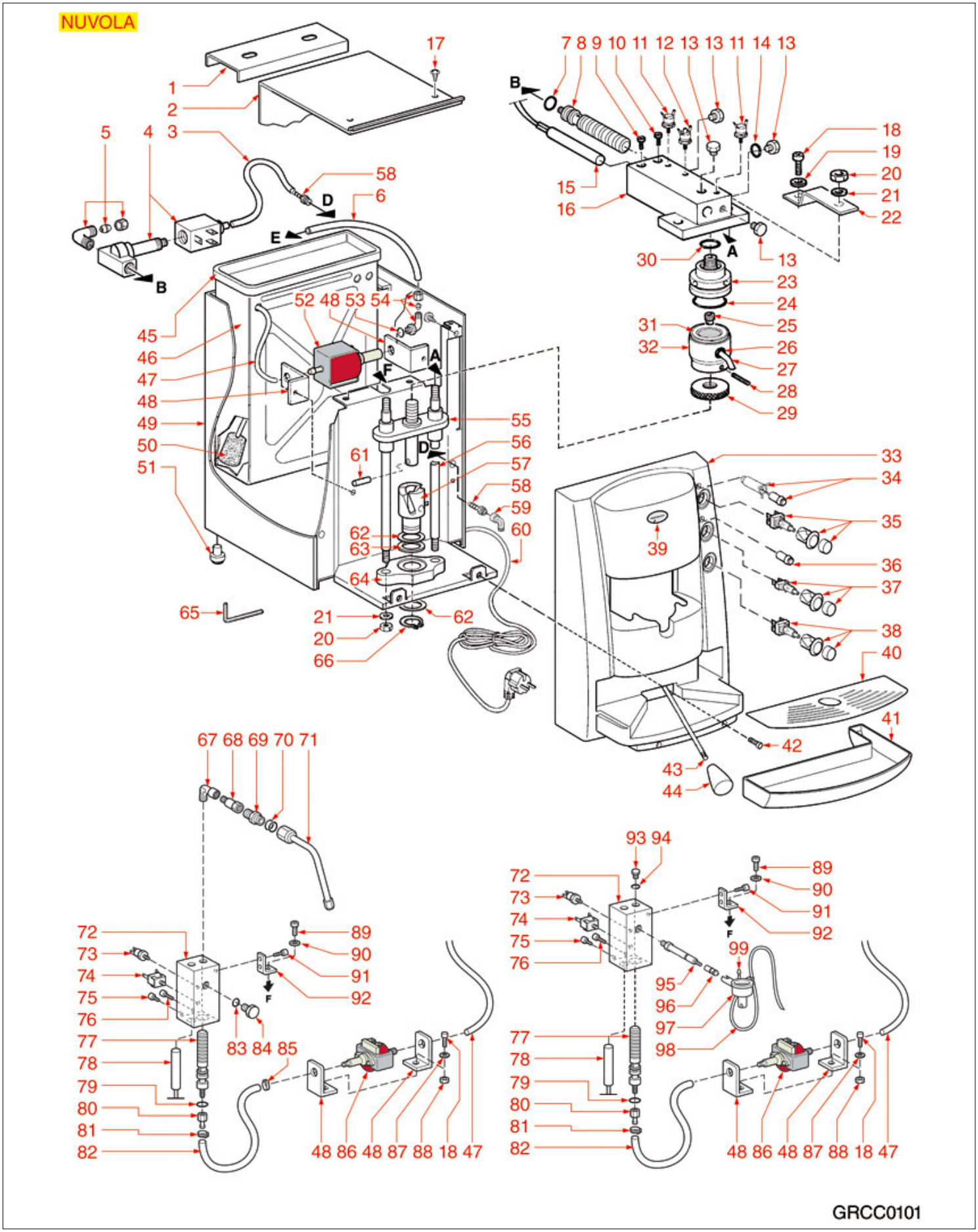

Positions without LF code no.: upon request

GRIMAC

Position	LF code no.	Description
4	1120088	3-WAY SOLENOID VALVE PARKER 230V 50/60Hz
5	1349250	"L"COUPLING 1/8"M-1/8"M ø 6 mm
6	1449502	PTFE PIPE ø 4x6 mm - 10 m
7	1186805	O-RING 0115 EPDM
8	1324127	BRASS TORPEDO PIN
9	5034989	CYLINDER HEAD SCREW M4x8
10	1455034	CYLINDER HEAD SCREW M4x10
11	1444003	CONTACT THERMOSTAT 95°C M4
11	1444506	CONTACT THERMOSTAT 90°C M4
12	1444206	CONTACT THERMOSTAT 145°C M4
14	1786087	0-RING 02037 RED SILICONE
15	1755180	CARTRIDGE HEATING ELEMENT 500W 230V
18	5014713	CYLINDER HEAD SCREW M5x16
20	3060069	HEXAGONAL NUT M8 MEDIUM
24	1786117	O-RING 0147 VITON
25	1510001	GROUP DIFFUSER ø 11 mm M12x1 H12
26	1186411	O-RING 02031 EPDM
27	1022070	SINGLE SPOUT ø 8 mm
28	1528093	SCREWS NO HEAD WITH HEX. SOCKET M4x20
30	1186472	O-RING 04075 EPDM
31	1081043	SHOWER SCREEN ø 55 mm TY1 277 HOLES
31	1081067	SHOWER SCREEN ø 55 mm TY0 253 HOLES
31	1081068	SHOWER SCREEN ø 55 mm TY2 349 HOLES
31	1081069	SHOWER SCREEN ø 55 mm TY3 400 HOLES
31	1081070	SHOWER SCREEN ø 55 mm TY4 277 HOLES
32	1086020	SHOWER HOLDER SPRAYER
34	1221040	RED INDICATOR LIGHT 240V
35	1319391	COMPLETE BIPOLAR SWITCH 16A 250V
37	1319395	COMPLETE MONOPOLAR SWITCH 10A 250V
38	1319394	COMPLETE BIPOLAR PUSH-BUTTON 10A 250V
40	1185016	CHROME-PLATED CUP SHELF
41	1015018	BLACK DRIP TRAY
45	1080182	WATER CONTAINER LID
46	1080183	WATER CONTAINER 2L
47	1449281	SILICONE HOSE ø 4x7 SHORE 60 - 100 m
48	1331023	SQUARE DAMPER EX-EP-EK-EA
50	3010303	WATER SOFTENER FOR OCS NICAL 125
52	1122601	VIBRATORY PUMP EX5 41W 120V 60Hz
52	1122735	VIBRATORY PUMP EX5 48W 230V 50Hz
53	1186411	O-RING 02031 EPDM
54	1349251	"L"COUPLING ø 1/8"M-1/8"M COMPLETE
57	1324126	BRASS CAM PIN
58	1349653	HOSE-END FITTING ø 1/8"M ø 6 NICKEL
59	1349716	NICHEL PLATED L-FITTING ø 1/8"M-1/8"F
67	1349716	NICHEL PLATED L-FITTING ø 1/8"M-1/8"F
70	1186687	O-RING M 0080-20 VITON
71	1449176	ST.STEEL COMPLETE STEAM PIPE ø 8 mm
73	1444521	CONTACT THERMOSTAT 155°C M4
74	1443034	CONTACT THERMOSTAT 200°C M4
75	5034989	CYLINDER HEAD SCREW M4x8
77	1324127	BRASS TORPEDO PIN
78	1755181	CARTRIDGE HEATING ELEMENT 800W 230V
79	1186805	O-RING 0115 EPDM
81	3449147	HOSE CLAMP ø 9.6-11.3 mm
83	1786087	0-RING 02037 RED SILICONE
86	1331017	VIBRATORY PUMP NME 3S 16W 230V 50Hz
88	3528213	HEXAGONAL NUT MID M5
89	5014713	CYLINDER HEAD SCREW M5x16
91	1455034	CYLINDER HEAD SCREW M4x10
94	1786087	0-RING 02037 RED SILICONE
96	1079018	CAPPUCCINATORE CONNECTOR TUBE
97	1079001	COMPLETE SMALL CAPPUCCINATORE WHITE
98	1449280	SILICONE HOSE ø 3x5 SHORE 60 - 100 m
99	5500786	PIN FOR WHITE CAPPUCCINATORE

POD COFFEE MACHINE TERRY

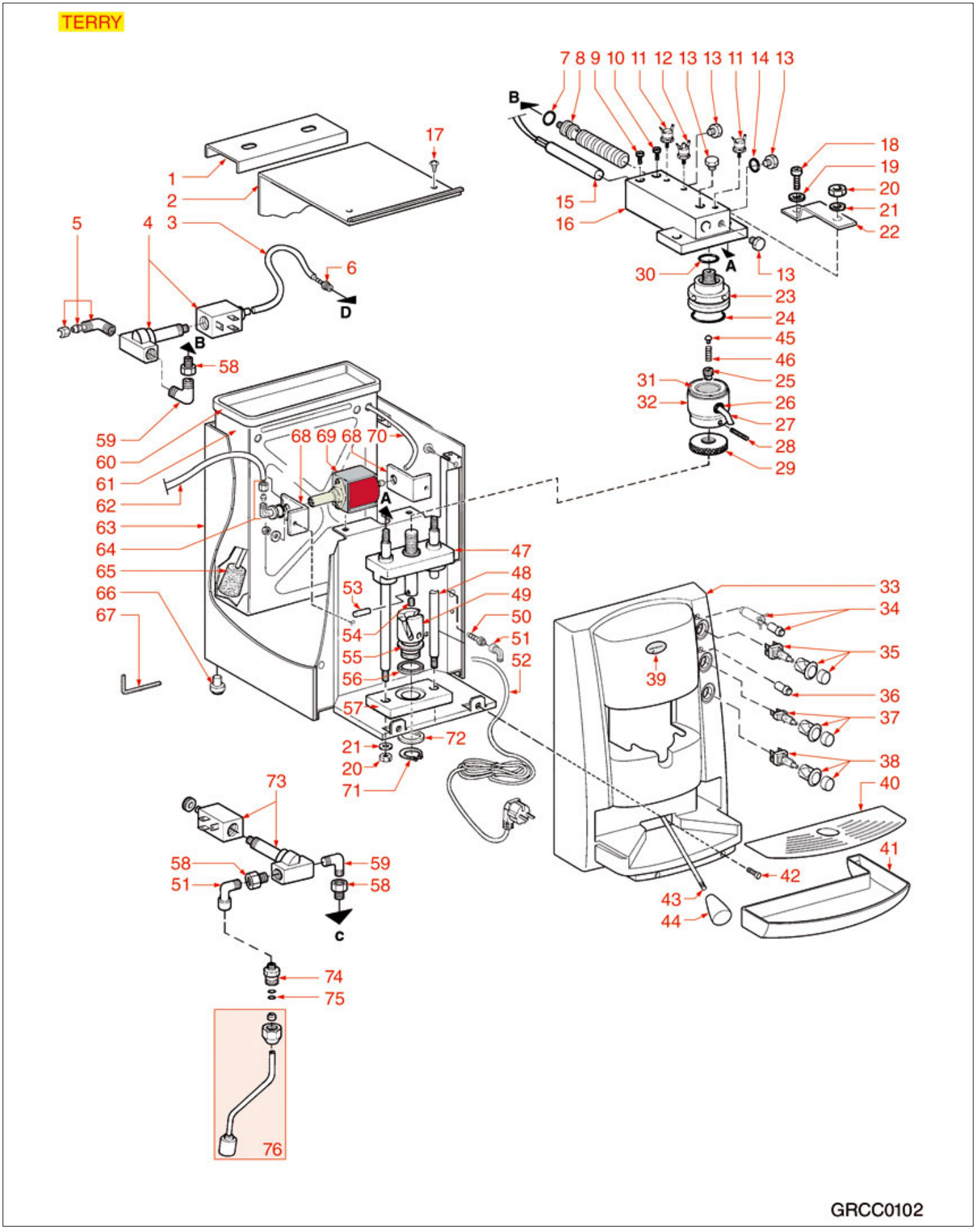

Positions without LF code no.: upon request

GRIMAC

Position	LF code no.	Description
4	1120088	3-WAY SOLENOID VALVE PARKER 230V 50/60Hz
5	1349250	"L"COUPLING 1/8"M-1/8"M ø 6 mm
6	1349653	HOSE-END FITTING ø 1/8"M ø 6 NICKEL
7	1186805	O-RING 0115 EPDM
8	1324127	BRASS TORPEDO PIN
9	5034989	CYLINDER HEAD SCREW M4x8
10	1455034	CYLINDER HEAD SCREW M4x10
11	1444003	CONTACT THERMOSTAT 95°C M4
11	1444506	CONTACT THERMOSTAT 90°C M4
12	1444206	CONTACT THERMOSTAT 145°C M4
14	1786087	0-RING 02037 RED SILICONE
15	1755180	CARTRIDGE HEATING ELEMENT 500W 230V
18	5014713	CYLINDER HEAD SCREW M5x16
20	3060069	HEXAGONAL NUT M8 MEDIUM
24	1786117	O-RING 0147 VITON
25	1510001	GROUP DIFFUSER ø 11 mm M12x1 H12
26	1186411	O-RING 02031 EPDM
27	1022070	SINGLE SPOUT ø 8 mm
28	1528093	SCREWS NO HEAD WITH HEX. SOCKET M4x20
30	1186472	O-RING 04075 EPDM
31	1081043	SHOWER SCREEN ø 55 mm TY1 277 HOLES
31	1081067	SHOWER SCREEN ø 55 mm TY0 253 HOLES
31	1081068	SHOWER SCREEN ø 55 mm TY2 349 HOLES
31	1081069	SHOWER SCREEN ø 55 mm TY3 400 HOLES
31	1081070	SHOWER SCREEN ø 55 mm TY4 277 HOLES
32	1086020	SHOWER HOLDER SPRAYER
34	1221040	RED INDICATOR LIGHT 240V
35	1319391	COMPLETE BIPOLAR SWITCH 16A 250V
37	1319395	COMPLETE MONOPOLAR SWITCH 10A 250V
38	1319394	COMPLETE BIPOLAR PUSH-BUTTON 10A 250V
40	1185017	CHROME-PLATED CUP SHELF
41	1015017	BLACK DRIP TRAY
45	1786080	SILICONE MUSHROOM GASKET
46	1250286	SPRING ø 7.5x24 mm
49	1324126	BRASS CAM PIN
50	1349653	HOSE-END FITTING ø 1/8"M ø 6 NICKEL
51	1349716	NICHEL PLATED L-FITTING ø 1/8"M-1/8"F
59	1349013	L-FITTING ø 1/8"M-1/8"M NICKEL-PLATED
60	1080182	WATER CONTAINER LID
61	1080183	WATER CONTAINER 2L
62	1449502	PTFE PIPE ø 4x6 mm - 10 m
64	1349251	"L"COUPLING ø 1/8"M-1/8"M COMPLETE
65	3010303	WATER SOFTENER FOR OCS NICAL 125
68	1331023	SQUARE DAMPER EX-EP-EK-EA
69	1122601	VIBRATORY PUMP EX5 41W 120V 60Hz
69	1122735	VIBRATORY PUMP EX5 48W 230V 50Hz
70	1449281	SILICONE HOSE ø 4x7 SHORE 60 - 100 m
73	1120501	2-WAY SOLENOID VALVE M&M 230/240V 50Hz
75	1186611	O-RING 02025 RED SILICONE

POD COFFEE MACHINE AMBRA

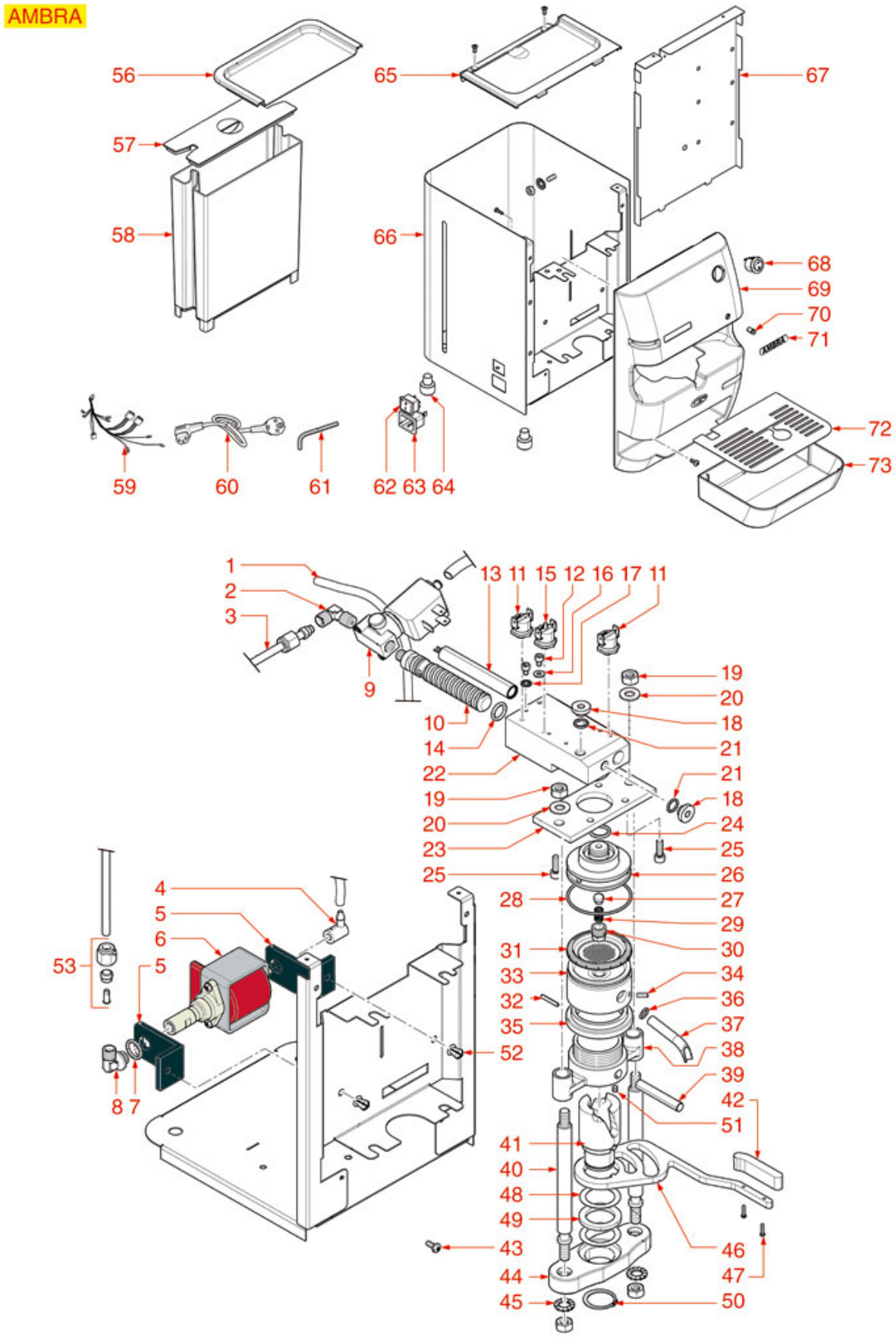

Positions without LF code no.: upon request

GRIMAC

Position	LF code no.	Description
1	1449281	SILICONE HOSE ø 4x7 SHORE 60 - 100 m
1	1449681	SILICONE HOSE ø 4x7 SHORE 60 - 5 m
2	1349250	"L"COUPLING 1/8"M-1/8"M ø 6 mm
3	1449502	PTFE PIPE ø 4x6 mm - 10 m
4	1349651	PIPETTE FITTING 90°
5	1331023	SQUARE DAMPER EX-EP-EK-EA
6	1122735	VIBRATORY PUMP EX5 48W 230V 50Hz
7	1186411	O-RING 02031 EPDM
8	1349251	"L"COUPLING ø 1/8"M-1/8"M COMPLETE
9	1120169	3-WAY SOLENOID VALVE AE 240V 50Hz 13VA
11	1444003	CONTACT THERMOSTAT 95°C M4
13	1755180	CARTRIDGE HEATING ELEMENT 500W 230V
14	1186805	O-RING 0115 EPDM
15	1444206	CONTACT THERMOSTAT 145°C M4
19	3060069	HEXAGONAL NUT M8 MEDIUM
24	1186472	O-RING 04075 EPDM
25	5014713	CYLINDER HEAD SCREW M5x16
27	1786080	SILICONE MUSHROOM GASKET
28	1786117	O-RING 0147 VITON
30	1510001	GROUP DIFFUSER ø 11 mm M12x1 H12
31	1081043	SHOWER SCREEN ø 55 mm TY1 277 HOLES
31	1081067	SHOWER SCREEN ø 55 mm TY0 253 HOLES
31	1081068	SHOWER SCREEN ø 55 mm TY2 349 HOLES
31	1081069	SHOWER SCREEN ø 55 mm TY3 400 HOLES
31	1081070	SHOWER SCREEN ø 55 mm TY4 277 HOLES
36	1186411	O-RING 02031 EPDM
37	1022069	SINGLE SPOUT ø 8 mm
57	1080182	WATER CONTAINER LID
58	1080183	WATER CONTAINER 2L
62	1319392	BLACK BIPOLAR SWITCH 10A 250V
68	1319393	BLACK MONOPOLAR SWITCH 10A 250V
70	1221040	RED INDICATOR LIGHT 240V

POD COFFEE MACHINE OPALE

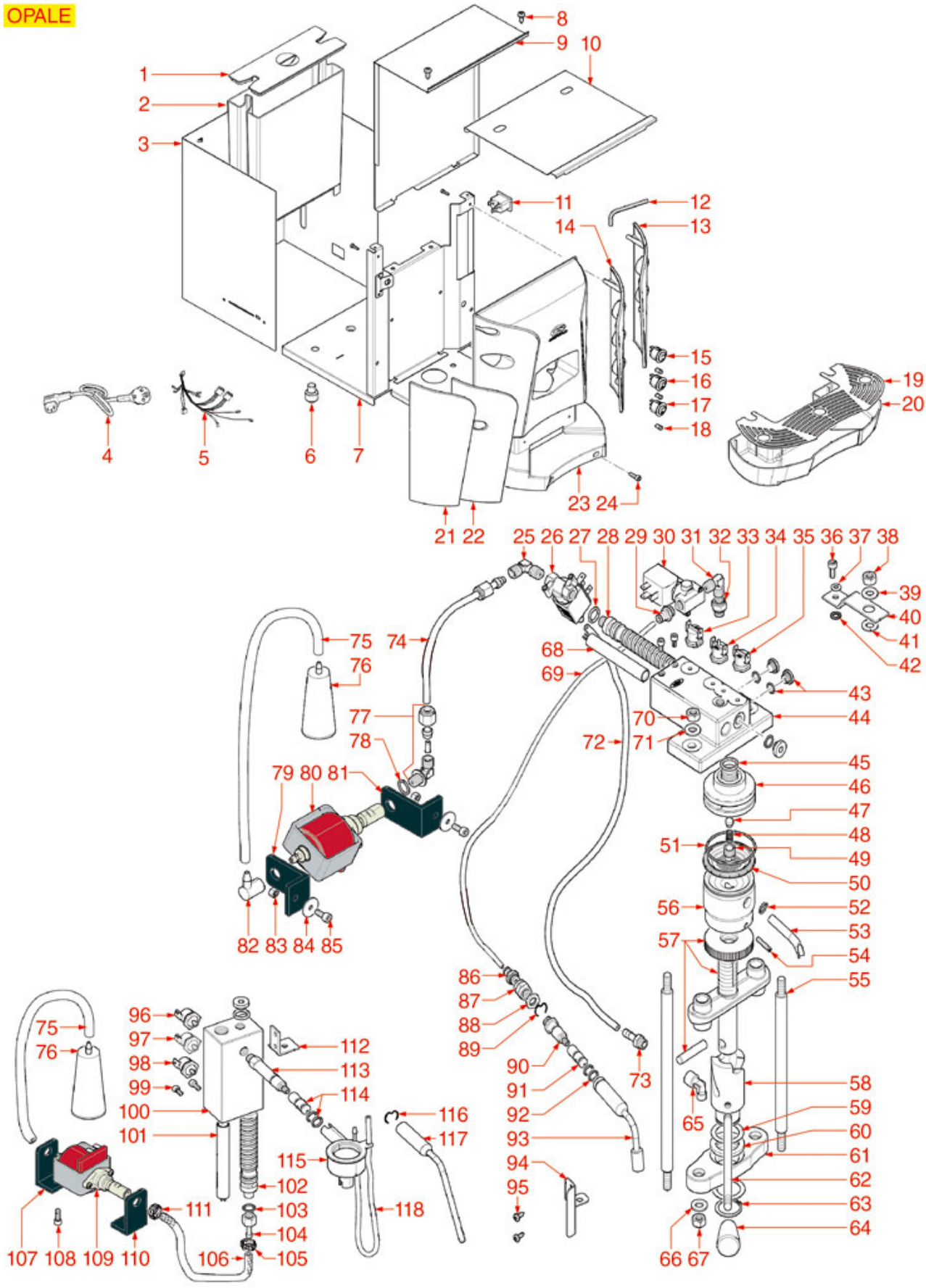

Positions without LF code no.: upon request

GRIMAC

Pos.	LF code no.	Description
1	1080182	WATER CONTAINER LID
2	1080183	WATER CONTAINER 2L
16	1319393	BLACK MONOPOLAR SWITCH 10A 250V
18	1221040	RED INDICATOR LIGHT 240V
25	1349250	"L"COUPLING 1/8"M-1/8"M ø 6 mm
26	1120169	3-WAY SOLENOID VALVE AE 240V 50Hz 13VA
27	1186805	O-RING 0115 EPDM
28	1324127	BRASS TORPEDO PIN
30	1120501	2-WAY SOLENOID VALVE M&M 230/240V 50Hz
31	1349013	L-FITTING ø 1/8"M-1/8"M NICKEL-PLATED
33	1444003	CONTACT THERMOSTAT 95°C M4
33	1444506	CONTACT THERMOSTAT 90°C M4
34	1444206	CONTACT THERMOSTAT 145°C M4
35	1444003	CONTACT THERMOSTAT 95°C M4
35	1444506	CONTACT THERMOSTAT 90°C M4
36	5014713	CYLINDER HEAD SCREW M5x16
38	3060069	HEXAGONAL NUT M8 MEDIUM
45	1186472	O-RING 04075 EPDM
47	1786080	SILICONE MUSHROOM GASKET
48	1250286	SPRING ø 7.5x24 mm
49	1510001	GROUP DIFFUSER ø 11 mm M12x1 H12
50	1081043	SHOWER SCREEN ø 55 mm TY1 277 HOLES
50	1081067	SHOWER SCREEN ø 55 mm TY0 253 HOLES
50	1081068	SHOWER SCREEN ø 55 mm TY2 349 HOLES
50	1081069	SHOWER SCREEN ø 55 mm TY3 400 HOLES
50	1081070	SHOWER SCREEN ø 55 mm TY4 277 HOLES
50	1081076	SHOWER SCREEN ø 55 mm TYA 177 HOLES
51	1786117	O-RING 0147 VITON
52	1186411	O-RING 02031 EPDM
53	1022070	SINGLE SPOUT ø 8 mm
54	1528093	SCREWS NO HEAD WITH HEX. SOCKET M4x20
56	1086020	SHOWER HOLDER SPRAYER
58	1324126	BRASS CAM PIN
65	1349716	NICHEL PLATED L-FITTING ø 1/8"M-1/8"F
67	3060069	HEXAGONAL NUT M8 MEDIUM
68	1755180	CARTRIDGE HEATING ELEMENT 500W 230V
69	1449281	SILICONE HOSE ø 4x7 SHORE 60 - 100 m
69	1449681	SILICONE HOSE ø 4x7 SHORE 60 - 5 m
70	3060069	HEXAGONAL NUT M8 MEDIUM
72	1449281	SILICONE HOSE ø 4x7 SHORE 60 - 100 m
72	1449681	SILICONE HOSE ø 4x7 SHORE 60 - 5 m
73	1349653	HOSE-END FITTING ø 1/8"M ø 6 NICKEL
74	1449502	PTFE PIPE ø 4x6 mm - 10 m
75	1449281	SILICONE HOSE ø 4x7 SHORE 60 - 100 m
75	1449681	SILICONE HOSE ø 4x7 SHORE 60 - 5 m
76	3010303	WATER SOFTENER FOR OCS NICAL 125
77	1349174	OLIVE ø 4 mm H10
77	1349184	OLIVE ø 6 mm H7
77	1349251	"L"COUPLING ø 1/8"M-1/8"M COMPLETE
78	1186411	O-RING 02031 EPDM
79	1331023	SQUARE DAMPER EX-EP-EK-EA
80	1122601	VIBRATORY PUMP EX5 41W 120V 60Hz
80	1122735	VIBRATORY PUMP EX5 48W 230V 50Hz
81	1331023	SQUARE DAMPER EX-EP-EK-EA
82	1349651	PIPETTE FITTING 90°
83	3528213	HEXAGONAL NUT MID M5
85	5014713	CYLINDER HEAD SCREW M5x16
91	1079018	CAPPUCCINATORE CONNECTOR TUBE
96	1444521	CONTACT THERMOSTAT 155°C M4
98	1443034	CONTACT THERMOSTAT 200°C M4
99	5034989	CYLINDER HEAD SCREW M4x8
101	1755181	CARTRIDGE HEATING ELEMENT 800W 230V
102	1324127	BRASS TORPEDO PIN
103	1186805	O-RING 0115 EPDM
107	1331023	SQUARE DAMPER EX-EP-EK-EA
109	1331017	VIBRATORY PUMP NME 3S 16W 230V 50Hz
110	1331023	SQUARE DAMPER EX-EP-EK-EA
114	1079018	CAPPUCCINATORE CONNECTOR TUBE
115	1079008	COMPLETE SMALL BLACK CAPPUCCINATORE
118	1449280	SILICONE HOSE ø 3x5 SHORE 60 - 100 m
118	1449680	SILICONE HOSE ø 3x5 SHORE 60 - 10 m

POD COFFEE MACHINE DADA VAPOR DOUBLE

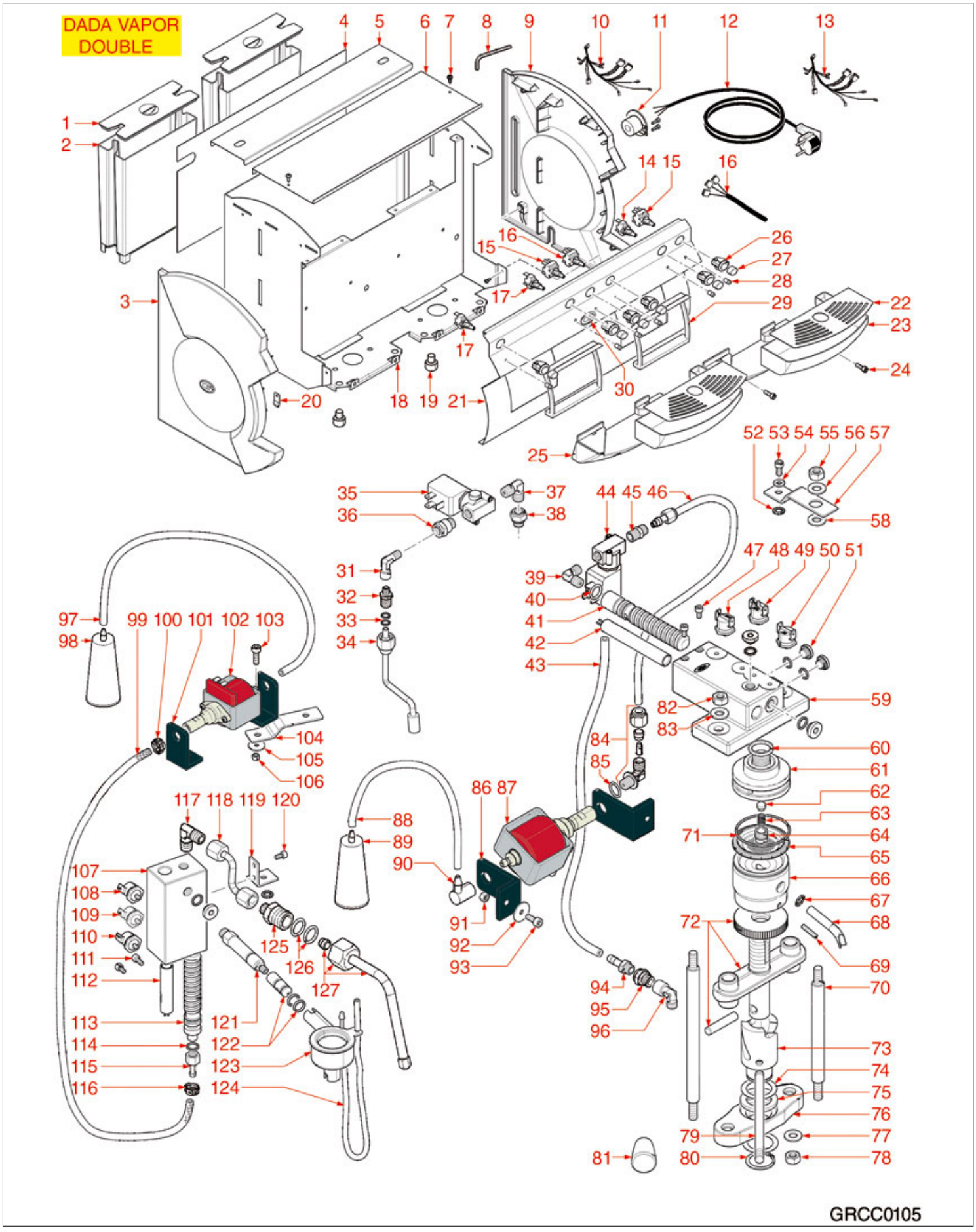

Positions without LF code no.: upon request

GRIMAC

Pos.	LF code no.	Description
1	1080182	WATER CONTAINER LID
2	1080183	WATER CONTAINER 2L
14	3319921	SINGLE-POLE SWITCH 16A 250V
15	1319394	COMPLETE BIPOLAR PUSH-BUTTON 10A 250V
16	1319005	BIPOLAR SWITCH 16A 250V
17	3319921	SINGLE-POLE SWITCH 16A 250V
22	1185017	CHROME-PLATED CUP SHELF
28	1221040	RED INDICATOR LIGHT 240V
31	1349716	NICHEL PLATED L-FITTING ø 1/8"M-1/8"F
33	1186611	O-RING 02025 RED SILICONE
35	1120501	2-WAY SOLENOID VALVE M&M 230/240V 50Hz
37	1349013	L-FITTING ø 1/8"M-1/8"M NICKEL-PLATED
39	1349013	L-FITTING ø 1/8"M-1/8"M NICKEL-PLATED
40	1186805	O-RING 0115 EPDM
42	1755180	CARTRIDGE HEATING ELEMENT 500W 230V
43	1449281	SILICONE HOSE ø 4x7 SHORE 60 - 100 m
43	1449681	SILICONE HOSE ø 4x7 SHORE 60 - 5 m
44	1120169	3-WAY SOLENOID VALVE AE 240V 50Hz 13VA
46	1449502	PTFE PIPE ø 4x6 mm - 10 m
47	5034989	CYLINDER HEAD SCREW M4x8
48	1444003	CONTACT THERMOSTAT 95°C M4
48	1444506	CONTACT THERMOSTAT 90°C M4
50	1444003	CONTACT THERMOSTAT 95°C M4
50	1444506	CONTACT THERMOSTAT 90°C M4
53	5014713	CYLINDER HEAD SCREW M5x16
55	3060069	HEXAGONAL NUT M8 MEDIUM
60	1186472	O-RING 04075 EPDM
62	1786080	SILICONE MUSHROOM GASKET
63	1250286	SPRING ø 7.5x24 mm
64	1510001	GROUP DIFFUSER ø 11 mm M12x1 H12
65	1081043	SHOWER SCREEN ø 55 mm TY1 277 HOLES
65	1081067	SHOWER SCREEN ø 55 mm TY0 253 HOLES
65	1081068	SHOWER SCREEN ø 55 mm TY2 349 HOLES
65	1081069	SHOWER SCREEN ø 55 mm TY3 400 HOLES
65	1081070	SHOWER SCREEN ø 55 mm TY4 277 HOLES
65	1081076	SHOWER SCREEN ø 55 mm TYA 177 HOLES
66	1086020	SHOWER HOLDER SPRAYER
67	1186411	O-RING 02031 EPDM
68	1022070	SINGLE SPOUT ø 8 mm
69	1528093	SCREWS NO HEAD WITH HEX. SOCKET M4x20
71	1786117	O-RING 0147 VITON
73	1324126	BRASS CAM PIN
78	3060069	HEXAGONAL NUT M8 MEDIUM
82	3060069	HEXAGONAL NUT M8 MEDIUM
84	1349174	OLIVE ø 4 mm H10
84	1349184	OLIVE ø 6 mm H7
84	1349251	"L"COUPLING ø 1/8"M-1/8"M COMPLETE
85	1186411	O-RING 02031 EPDM
86	1331023	SQUARE DAMPER EX-EP-EK-EA
87	1122601	VIBRATORY PUMP EX5 41W 120V 60Hz
87	1122735	VIBRATORY PUMP EX5 48W 230V 50Hz
88	1449281	SILICONE HOSE ø 4x7 SHORE 60 - 100 m
88	1449681	SILICONE HOSE ø 4x7 SHORE 60 - 5 m
89	3010303	WATER SOFTENER FOR OCS NICAL 125
90	1349651	PIPETTE FITTING 90°
91	3528213	HEXAGONAL NUT MID M5
93	5014713	CYLINDER HEAD SCREW M5x16
94	1349653	HOSE-END FITTING ø 1/8"M ø 6 NICKEL
96	1349716	NICHEL PLATED L-FITTING ø 1/8"M-1/8"F
97	1449281	SILICONE HOSE ø 4x7 SHORE 60 - 100 m
97	1449681	SILICONE HOSE ø 4x7 SHORE 60 - 5 m
98	3010303	WATER SOFTENER FOR OCS NICAL 125
101	1331023	SQUARE DAMPER EX-EP-EK-EA
102	1331017	VIBRATORY PUMP NME 3S 16W 230V 50Hz
106	3528213	HEXAGONAL NUT MID M5
108	1444521	CONTACT THERMOSTAT 155°C M4

Pos.	LF code no.	Description
110	1444206	CONTACT THERMOSTAT 145°C M4
111	1455034	CYLINDER HEAD SCREW M4x10
112	1755181	CARTRIDGE HEATING ELEMENT 800W 230V
113	1324127	BRASS TORPEDO PIN
114	1186805	O-RING 0115 EPDM
117	1349013	L-FITTING ø 1/8"M-1/8"M NICKEL-PLATED
120	5034989	CYLINDER HEAD SCREW M4x8
122	1079018	CAPPUCCINATORE CONNECTOR TUBE
123	1079008	COMPLETE SMALL BLACK CAPPUCCINATORE
124	1449280	SILICONE HOSE ø 3x5 SHORE 60 - 100 m
124	1449680	SILICONE HOSE ø 3x5 SHORE 60 - 10 m
126	1186687	O-RING M 0080-20 VITON
127	1449176	ST.STEEL COMPLETE STEAM PIPE ø 8 mm

POD COFFEE MACHINE NEW CIALDA VAPOR

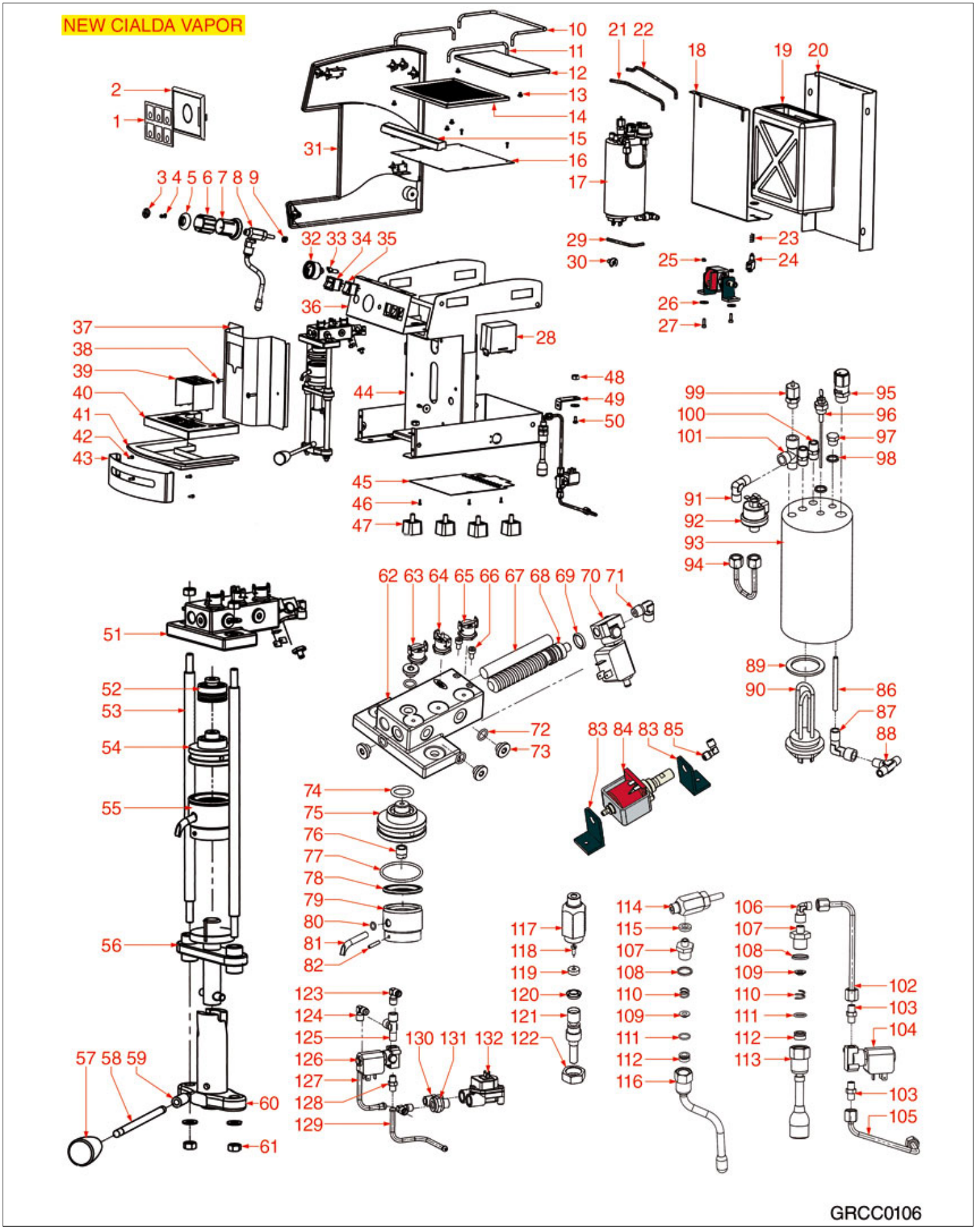

Positions without LF code no.: upon request

GRIMAC

Position	LF code no.	Description
3	1241601	STEAM CAP FOR KNOB
5	1241164	STEAM TAP KNOB
5	1241165	WATER TAP KNOB
6	1241164	STEAM TAP KNOB
6	1241165	WATER TAP KNOB
25	3528213	HEXAGONAL NUT MID M5
27	5014713	CYLINDER HEAD SCREW M5x16
28	1341036	LEVEL REGULATOR MFC2SG 220V
32	1245044	BOILER PRESSURE GAUGE ø 41 mm 0÷2,5 bar
33	3221080	RED INDICATOR LAMP 230V
34	1319806	BLACK BIPOLAR SWITCH 16A 250V
34	1319809	BLACK BIPOLAR SWITCH 16A 250V
35	3319294	BLACK BIPOLAR SWITCH 16A 250V
42	1455034	CYLINDER HEAD SCREW M4x10
61	3060069	HEXAGONAL NUT M8 MEDIUM
63	1444003	CONTACT THERMOSTAT 95°C M4
64	1444206	CONTACT THERMOSTAT 145°C M4
65	1444003	CONTACT THERMOSTAT 95°C M4
66	5034989	CYLINDER HEAD SCREW M4x8
67	1755180	CARTRIDGE HEATING ELEMENT 500W 230V
68	1324127	BRASS TORPEDO PIN
69	1186805	O-RING 0115 EPDM
70	1120088	3-WAY SOLENOID VALVE PARKER 230V 50/60Hz
71	1349250	"L"COUPLING 1/8"M-1/8"M ø 6 mm
72	1786087	0-RING 02037 RED SILICONE
74	1186472	O-RING 04075 EPDM
76	1510001	GROUP DIFFUSER ø 11 mm M12x1 H12
77	1786117	O-RING 0147 VITON
78	1081043	SHOWER SCREEN ø 55 mm TY1 277 HOLES
79	1086020	SHOWER HOLDER SPRAYER
80	1186411	O-RING 02031 EPDM
81	1022070	SINGLE SPOUT ø 8 mm
82	1528093	SCREWS NO HEAD WITH HEX. SOCKET M4x20
83	1331023	SQUARE DAMPER EX-EP-EK-EA
84	1122735	VIBRATORY PUMP EX5 48W 230V 50Hz
85	1349250	"L"COUPLING 1/8"M-1/8"M ø 6 mm
87	1349717	NICHEL PLATED L-FITTING ø 1/4"M-1/4"F
88	3349356	NICHEL-PL.T-FITTING ø 1/8"M-1/8"M-1/8"M
89	1186623	PTFE FLAT GASKET ø 53x43x3 mm
89	1186633	FLAT CARBO GASKET ø 53x42x3 mm
90	1755603	HEATING ELEMENT 1300W 230V
91	1349710	NICHEL PLATED L-FITTING ø 1/4"M-1/4"M
95	1515002	BOILER VALVE ø 3/8"M CE-PED
96	1341750	LEVEL PROBE ø 1/4"M-125 mm
98	1186982	FLAT PTFE GASKET ø 17x13x2 mm
99	1523538	BOILER VALVE ø 1/4"M
101	1349702	"T" FITTING ø 1/4"F-1/4"F-1/4"M NICKEL-P
104	1120501	2-WAY SOLENOID VALVE M&M 230/240V 50Hz
106	1349716	NICHEL PLATED L-FITTING ø 1/8"M-1/8"F
108	1186201	GASKET FLAT PTFE ø 21x16.8x2 mm
109	1186334	WASHER
110	1250547	SPRING ø 11.5x16 mm
111	1186346	O-RING 02043 EPDM
112	1186680	CONICAL PTFE SEAL ø 14.5x9x8 mm
113	1549023	COMPLETE WATER PIPE
119	1186342	FLAT GASKET ø 11x3x4 mm EPDM
120	1186491	LIP SEAL ø 14x7x5 mm
123	1349250	"L"COUPLING 1/8"M-1/8"M ø 6 mm
124	1349013	L-FITTING ø 1/8"M-1/8"M NICKEL-PLATED
125	3349355	NICHEL-PL.T-FITTING ø 1/8"F-1/8"F-1/8"F
126	1120501	2-WAY SOLENOID VALVE M&M 230/240V 50Hz
131	1349137	FITTING ø 1/4"M-1/8"F
132	1455067	VOLUMETRIC FLOWMETER GICAR

POD COFFEE MACHINE NEW CIALDA VAPOR 2

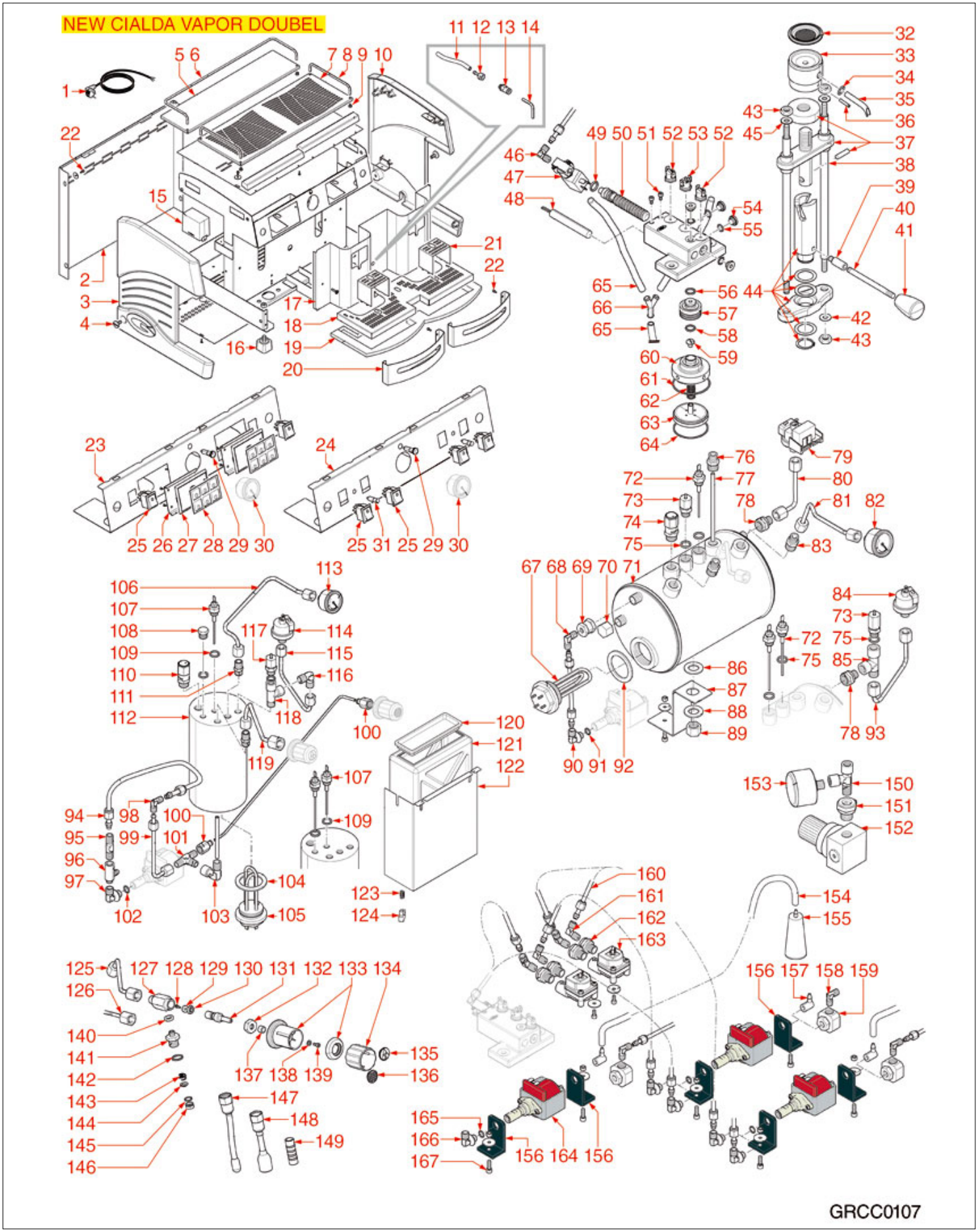

Positions without LF code no.: upon request

GRIMAC

Pos.	LF code no.	Description
11	1449281	SILICONE HOSE ø 4x7 SHORE 60 - 100 m
11	1449681	SILICONE HOSE ø 4x7 SHORE 60 - 5 m
15	1341036	LEVEL REGULATOR MFC2SG 220V
22	1455034	CYLINDER HEAD SCREW M4x10
25	1319809	BLACK BIPOLAR SWITCH 16A 250V
25	3319294	BLACK BIPOLAR SWITCH 16A 250V
29	3221080	RED INDICATOR LAMP 230V
30	1245044	BOILER PRESSURE GAUGE ø 41 mm 0÷2,5 bar
31	1221040	RED INDICATOR LIGHT 240V
32	1081043	SHOWER SCREEN ø 55 mm TY1 277 HOLES
33	1086020	SHOWER HOLDER SPRAYER
34	1186411	O-RING 02031 EPDM
35	1022070	SINGLE SPOUT ø 8 mm
36	1528093	SCREWS NO HEAD WITH HEX. SOCKET M4x20
43	3060069	HEXAGONAL NUT M8 MEDIUM
47	1120088	3-WAY SOLENOID VALVE PARKER 230V 50/60Hz
48	1755180	CARTRIDGE HEATING ELEMENT 500W 230V
49	1186805	O-RING 0115 EPDM
50	1324127	BRASS TORPEDO PIN
51	5034989	CYLINDER HEAD SCREW M4x8
52	1444003	CONTACT THERMOSTAT 95°C M4
53	1444206	CONTACT THERMOSTAT 145°C M4
55	1786087	0-RING 02037 RED SILICONE
56	1186472	O-RING 04075 EPDM
58	1186472	O-RING 04075 EPDM
64	1786117	O-RING 0147 VITON
65	1449281	SILICONE HOSE ø 4x7 SHORE 60 - 100 m
65	1449681	SILICONE HOSE ø 4x7 SHORE 60 - 5 m
68	1349250	"L"COUPLING 1/8"M-1/8"M ø 6 mm
72	1341750	LEVEL PROBE ø 1/4"M-125 mm
73	1523538	BOILER VALVE ø 1/4"M
74	1515002	BOILER VALVE ø 3/8"M CE-PED
75	1186982	FLAT PTFE GASKET ø 17x13x2 mm
76	1349112	FITTING ø 1/4"M-3/8"M
78	1349137	FITTING ø 1/4"M-1/8"F
82	1245044	BOILER PRESSURE GAUGE ø 41 mm 0÷2,5 bar
83	1349112	FITTING ø 1/4"M-3/8"M
85	1349708	NICHEL PLATED T-FITTING ø 3/8"F-3/8"F
90	1349251	"L"COUPLING ø 1/8"M-1/8"M COMPLETE
91	1186611	O-RING 02025 RED SILICONE
92	1186623	PTFE FLAT GASKET ø 53x43x3 mm
92	1186633	FLAT CARBO GASKET ø 53x42x3 mm
94	1449502	PTFE PIPE ø 4x6 mm - 10 m
96	1331019	VALVE S2
97	1349251	"L"COUPLING ø 1/8"M-1/8"M COMPLETE
98	1349250	"L"COUPLING 1/8"M-1/8"M ø 6 mm
101	3349356	NICHEL-PL.T-FITTING ø 1/8"M-1/8"M-1/8"M
102	1186611	O-RING 02025 RED SILICONE
103	1349717	NICHEL PLATED L-FITTING ø 1/4"M-1/4"F
104	1186623	PTFE FLAT GASKET ø 53x43x3 mm
104	1186633	FLAT CARBO GASKET ø 53x42x3 mm
105	1755603	HEATING ELEMENT 1300W 230V
107	1341750	LEVEL PROBE ø 1/4"M-125 mm
109	1186982	FLAT PTFE GASKET ø 17x13x2 mm
110	1515002	BOILER VALVE ø 3/8"M CE-PED
113	1245044	BOILER PRESSURE GAUGE ø 41 mm 0÷2,5 bar
116	1349710	NICHEL PLATED L-FITTING ø 1/4"M-1/4"M
117	1523538	BOILER VALVE ø 1/4"M
118	1349708	NICHEL PLATED T-FITTING ø 3/8"F-3/8"F
129	1186342	FLAT GASKET ø 11x3x4 mm EPDM
130	1186491	LIP SEAL ø 14x7x5 mm
133	1241164	STEAM TAP KNOB
133	1241165	WATER TAP KNOB
134	1241164	STEAM TAP KNOB
134	1241165	WATER TAP KNOB
135	1241601	STEAM CAP FOR KNOB
136	1241602	WATER CAP FOR KNOB
138	1528117	WASHER FLAT LARGE M4
139	1455034	CYLINDER HEAD SCREW M4x10
142	1186201	GASKET FLAT PTFE ø 21x16.8x2 mm
143	1250547	SPRING ø 11.5x16 mm
144	1186334	WASHER
145	1186346	O-RING 02043 EPDM
146	1186680	CONICAL PTFE SEAL ø 14.5x9x8 mm
148	1549023	COMPLETE WATER PIPE
149	1187501	BURN PREVENTING PIPE HANDGRIP ø 8 mm
150	3349355	NICHEL-PL.T-FITTING ø 1/8"F-1/8"F-1/8"F
151	1349137	FITTING ø 1/4"M-1/8"F
154	1449281	SILICONE HOSE ø 4x7 SHORE 60 - 100 m
154	1449681	SILICONE HOSE ø 4x7 SHORE 60 - 5 m
155	3010303	WATER SOFTENER FOR OCS NICAL 125
156	1331023	SQUARE DAMPER EX-EP-EK-EA
157	1349651	PIPETTE FITTING 90°
158	1349250	"L"COUPLING 1/8"M-1/8"M ø 6 mm
160	1449502	PTFE PIPE ø 4x6 mm - 10 m
162	1349137	FITTING ø 1/4"M-1/8"F
163	1455067	VOLUMETRIC FLOWMETER GICAR
164	1122735	VIBRATORY PUMP EX5 48W 230V 50Hz
165	1186611	O-RING 02025 RED SILICONE
166	1349251	"L"COUPLING ø 1/8"M-1/8"M COMPLETE
167	5014713	CYLINDER HEAD SCREW M5x16

POD COFFEE MACHINE OPALE

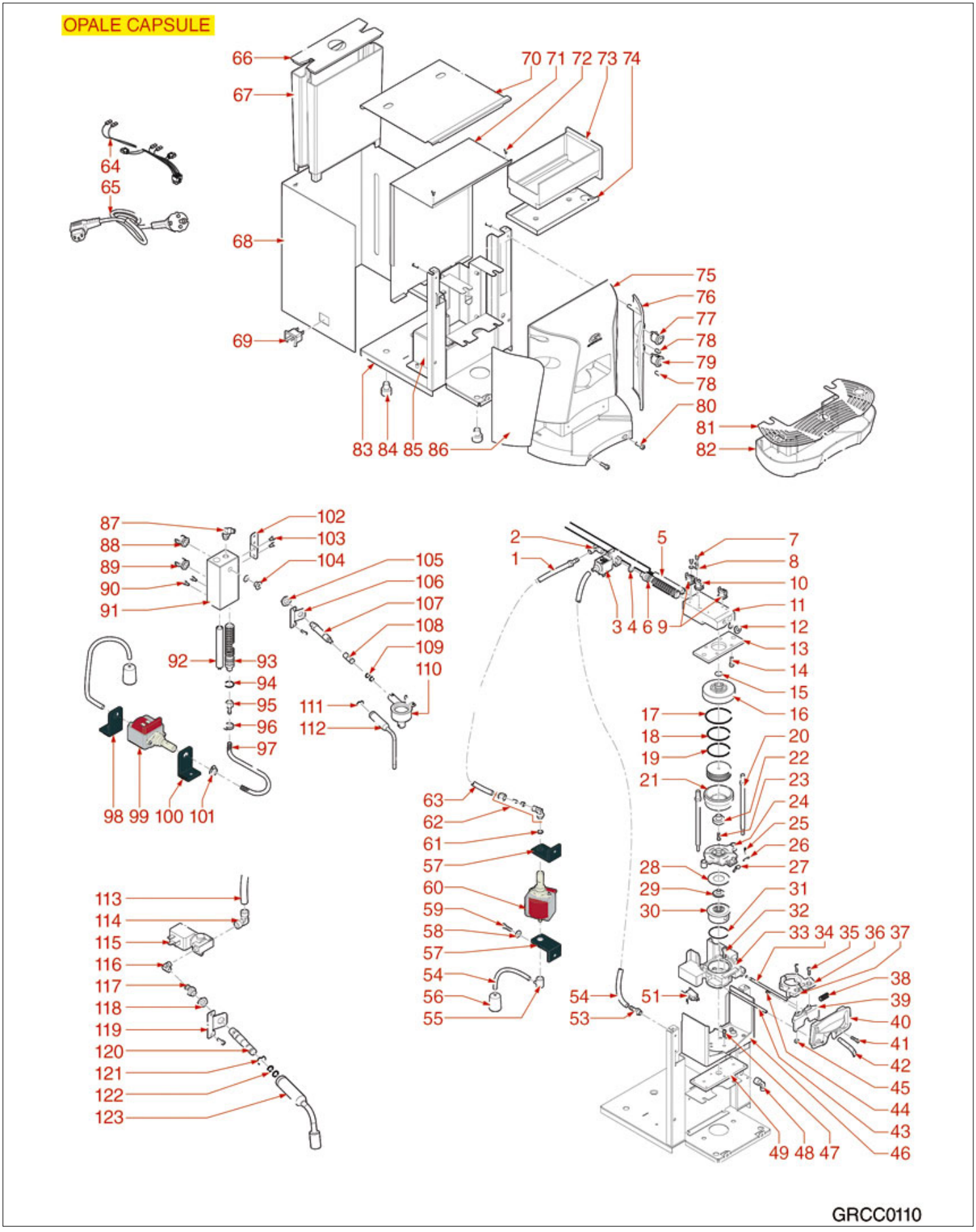

Positions without LF code no.: upon request

GRIMAC

Position	LF code no.	Description
1	1449502	PTFE PIPE ø 4x6 mm - 10 m
2	1349250	"L"COUPLING 1/8"M-1/8"M ø 6 mm
3	1120169	3-WAY SOLENOID VALVE AE 240V 50Hz 13VA
4	1186805	O-RING 0115 EPDM
5	1755180	CARTRIDGE HEATING ELEMENT 500W 230V
10	1444206	CONTACT THERMOSTAT 145°C M4
14	5014713	CYLINDER HEAD SCREW M5x16
15	1186472	O-RING 04075 EPDM
18	1786117	O-RING 0147 VITON
35	1184006	LOW CYLINDER HEAD SCREW M4x12
48	1349716	NICHEL PLATED L-FITTING ø 1/8"M-1/8"F
53	1349653	HOSE-END FITTING ø 1/8"M ø 6 NICKEL
54	1449681	SILICONE HOSE ø 4x7 SHORE 60 - 5 m
55	1349651	PIPETTE FITTING 90°
56	3010303	WATER SOFTENER FOR OCS NICAL 125
57	1331023	SQUARE DAMPER EX-EP-EK-EA
59	5014713	CYLINDER HEAD SCREW M5x16
60	1122735	VIBRATORY PUMP EX5 48W 230V 50Hz
61	1186411	O-RING 02031 EPDM
62	1349251	"L"COUPLING ø 1/8"M-1/8"M COMPLETE
63	1449502	PTFE PIPE ø 4x6 mm - 10 m
66	1080182	WATER CONTAINER LID
67	1080183	WATER CONTAINER 2L
78	1221040	RED INDICATOR LIGHT 240V
79	1319393	BLACK MONOPOLAR SWITCH 10A 250V
80	5014713	CYLINDER HEAD SCREW M5x16
88	1444521	CONTACT THERMOSTAT 155°C M4
90	5034989	CYLINDER HEAD SCREW M4x8
92	1755181	CARTRIDGE HEATING ELEMENT 800W 230V
93	1324127	BRASS TORPEDO PIN
94	1186805	O-RING 0115 EPDM
98	1331022	SQUARE DAMPER HF
99	1331017	VIBRATORY PUMP NME 3S 16W 230V 50Hz
100	1331022	SQUARE DAMPER HF
103	5034989	CYLINDER HEAD SCREW M4x8
108	1079018	CAPPUCCINATORE CONNECTOR TUBE
110	1079008	COMPLETE SMALL BLACK CAPPUCCINATORE
113	1449500	PTFE PIPE ø 2x4 mm - 10 m
115	1120501	2-WAY SOLENOID VALVE M&M 230/240V 50Hz

MIA BREW GROUP

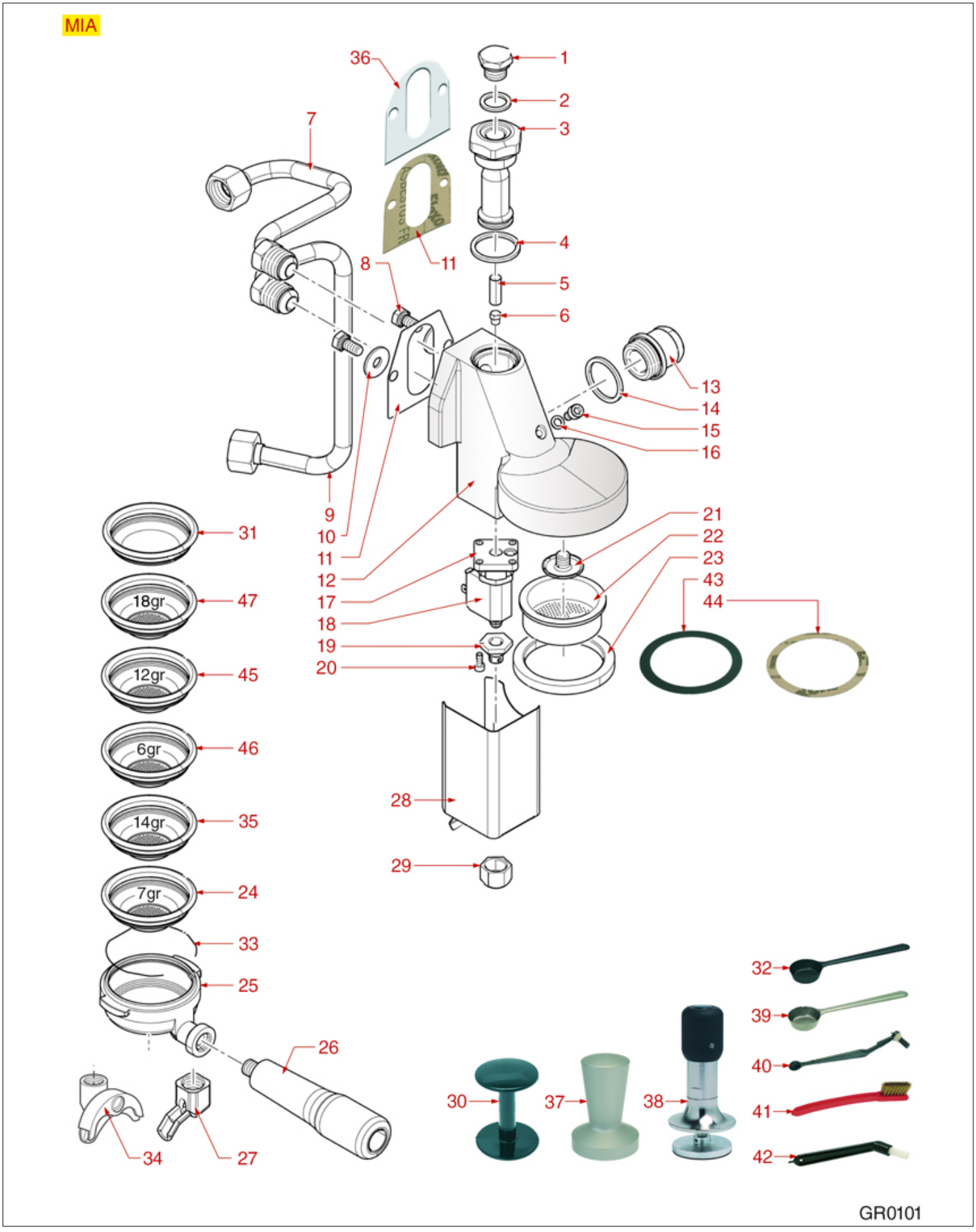

Positions without LF code no.: upon request

GRIMAC

Position	LF code no.	Description
1	1439001	CAP ø 16 mm FOR BREW GROUP
2	1186326	PTFE FLAT GASKET ø 22x16x2 mm
3	1027016	UPPER CHROMIUM-PLATED SLEEVE
4	1186307	PTFE FLAT GASKET ø 36x30x2 mm
5	1160517	WATER FILTER ø 8.5x22 mm
6	1501541	NOZZLE M6x1 HOLE ø 0,8 mm
11	1186384	COFFEE GROUP GASKET 80x70x2 mm
13	1439011	CHROMIUM-PLATED SIDE CAP
14	1186307	PTFE FLAT GASKET ø 36x30x2 mm
15	1184804	CYLINDER HEAD SCREW M6x8
16	3528010	FLAT WASHER M6
17	1120339	3-WAY MECHANICAL COMPONENT PARKER
18	1120336	COIL PARKER ZB09 9W 110/120V 50/60Hz
18	3120032	COIL PARKER ZB09 9W 220/240V 50/60Hz
20	1455034	CYLINDER HEAD SCREW M4x10
21	1501561	GROUP SPRAY NOZZLE ø 30 mm M10x1
22	1081016	SHOWER SCREEN ø 60 mm
22	1081116	SHOWER SCREEN ø 60 mm
22	1081516	SHOWER ø 60 mm
23	1186891	FILTER HOLDER GASKET ø 73x57x8 mm
24	1160335	1 CUP FILTER 7 g
25	1165022	FILTER HOLDER COFFEE MACHINES
26	1241504	FILTER HOLDER HANDLE M12
27	1022501	SINGLE SPOUT ø 3/8"
30	1385002	NYLON COFFEE TAMPER ø 50/57 mm
31	1160339	BLIND FILTER
32	1069001	PLASTIC MEASURING SPOON 20 ml
33	1250101	FILTER BLOCKING SPRING ø 1,00 mm INOX
34	1022521	LONG DOUBLE SPOUT ø 3/8"
35	1160337	2-CUP FILTER 14 GRAMS
36	1186508	COFFEE GROUP GASKET 77x73x2 mm
37	1385053	ANODISED ALUMINUM TAMPER ø 58 mm
38	1385600	DYNAMOMETRIC MANUAL COFFEE TAMPER ø 57mm
39	1069002	STAINLESS STEEL MEASURING SPOON 20 ml
40	1384003	BLACK SHOWER CLEANING BRUSH
40	1384011	RED SHOWER CLEANING BRUSH
40	1384012	ORANGE SHOWER CLEANING BRUSH
41	1384002	BRUSH FOR MAINTENANCE
42	1384001	BRUSH FOR COFFEE SHOWER
43	1190002	RUBBER SHIM ø 73x59x1 mm EPDM
44	1190001	PAPER SHIM ø 73x59x0.8 mm
45	1160252	2-CUP FILTER 12 GRAMS
46	1160251	1 CUP FILTER 6 g
47	1160345	2 CUPS FILTER 18 gr

ZOLAI-ZOLAII-TEN-TWENTY-ECLISSE GROUP

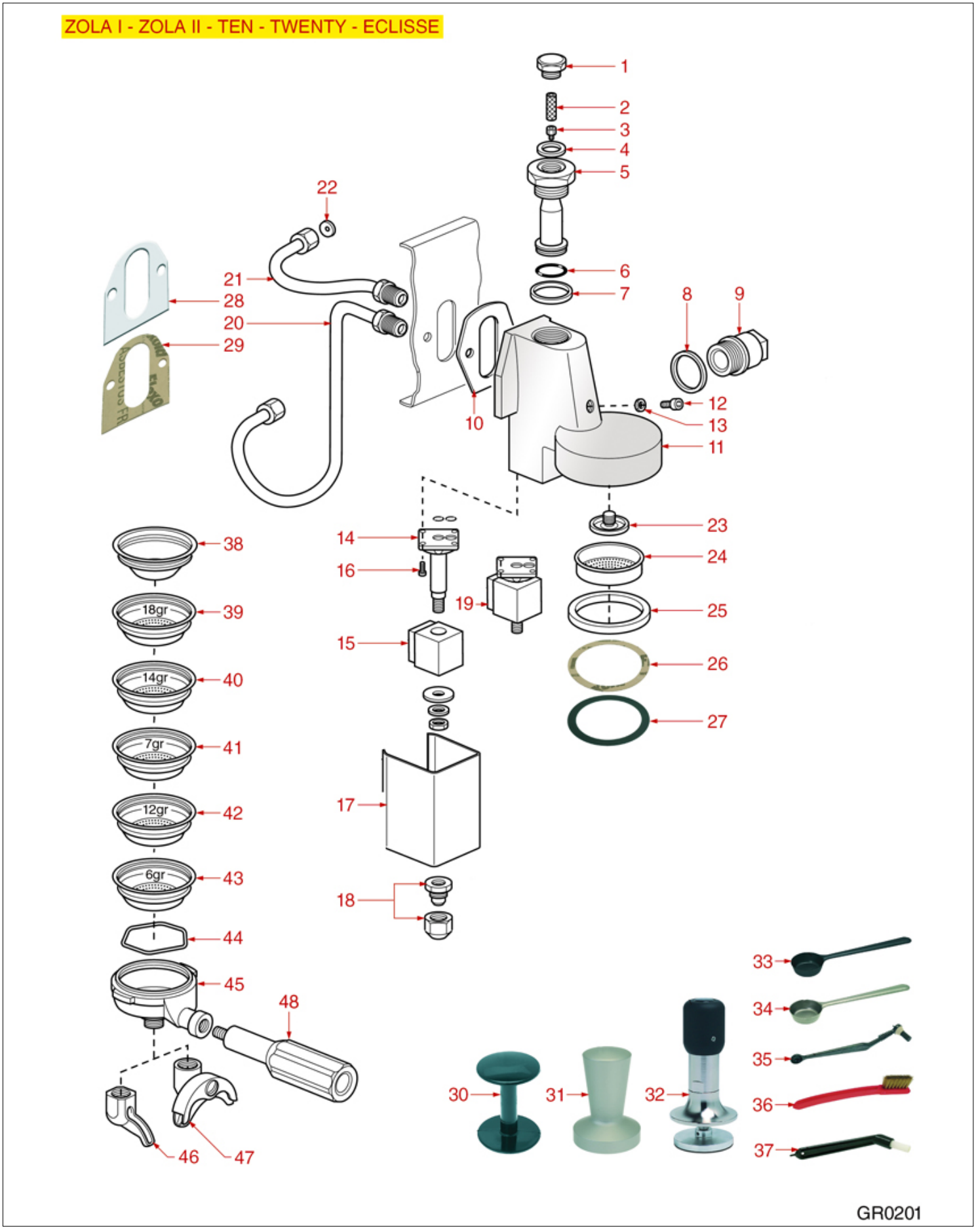

Positions without LF code no.: upon request

GRIMAC

Position	LF code no.	Description
1	1439001	CAP ø 16 mm FOR BREW GROUP
2	1160517	WATER FILTER ø 8.5x22 mm
3	1501522	NOZZLE M6x1 HOLE ø 0,75 mm
4	1186326	PTFE FLAT GASKET ø 22x16x2 mm
5	1027016	UPPER CHROMIUM-PLATED SLEEVE
6	1186591	O-RING 0128 VITON
7	1186307	PTFE FLAT GASKET ø 36x30x2 mm
8	1186307	PTFE FLAT GASKET ø 36x30x2 mm
9	1439011	CHROMIUM-PLATED SIDE CAP
10	1186384	COFFEE GROUP GASKET 80x70x2 mm
12	1184804	CYLINDER HEAD SCREW M6x8
13	3528010	FLAT WASHER M6
14	1120339	3-WAY MECHANICAL COMPONENT PARKER
15	3120032	COIL PARKER ZB09 9W 220/240V 50/60Hz
16	1455034	CYLINDER HEAD SCREW M4x10
18	1349007	DRAIN CHROMIUM-PLATED FITTING
19	1120330	3-WAY SOLENOID VALVE LUCIFER 240V 50Hz
19	1120335	3-WAY SOLENOID VALVE PARKER 230V 50/60Hz
23	1501561	GROUP SPRAY NOZZLE ø 30 mm M10x1
24	1081016	SHOWER SCREEN ø 60 mm
24	1081116	SHOWER SCREEN ø 60 mm
24	1081516	SHOWER ø 60 mm
25	1186891	FILTER HOLDER GASKET ø 73x57x8 mm
26	1190001	PAPER SHIM ø 73x59x0.8 mm
27	1190002	RUBBER SHIM ø 73x59x1 mm EPDM
28	1186508	COFFEE GROUP GASKET 77x73x2 mm
29	1186384	COFFEE GROUP GASKET 80x70x2 mm
30	1385002	NYLON COFFEE TAMPER ø 50/57 mm
31	1385053	ANODISED ALUMINUM TAMPER ø 58 mm
32	1385600	DYNAMOMETRIC MANUAL COFFEE TAMPER ø 57mm
33	1069001	PLASTIC MEASURING SPOON 20 ml
34	1069002	STAINLESS STEEL MEASURING SPOON 20 ml
35	1384003	BLACK SHOWER CLEANING BRUSH
35	1384011	RED SHOWER CLEANING BRUSH
35	1384012	ORANGE SHOWER CLEANING BRUSH
36	1384002	BRUSH FOR MAINTENANCE
37	1384001	BRUSH FOR COFFEE SHOWER
38	1160339	BLIND FILTER
39	1160345	2 CUPS FILTER 18 gr
40	1160337	2-CUP FILTER 14 GRAMS
41	1160335	1 CUP FILTER 7 g
42	1160252	2-CUP FILTER 12 GRAMS
43	1160251	1 CUP FILTER 6 g
44	1250101	FILTER BLOCKING SPRING ø 1,00 mm INOX
45	1165022	FILTER HOLDER COFFEE MACHINES
46	1022501	SINGLE SPOUT ø 3/8"
47	1022502	DOUBLE SPOUT ø 3/8"
48	1241504	FILTER HOLDER HANDLE M12

ZOLAI-ZOLAII-TEN-TWENTY-ECLISSE GROUP

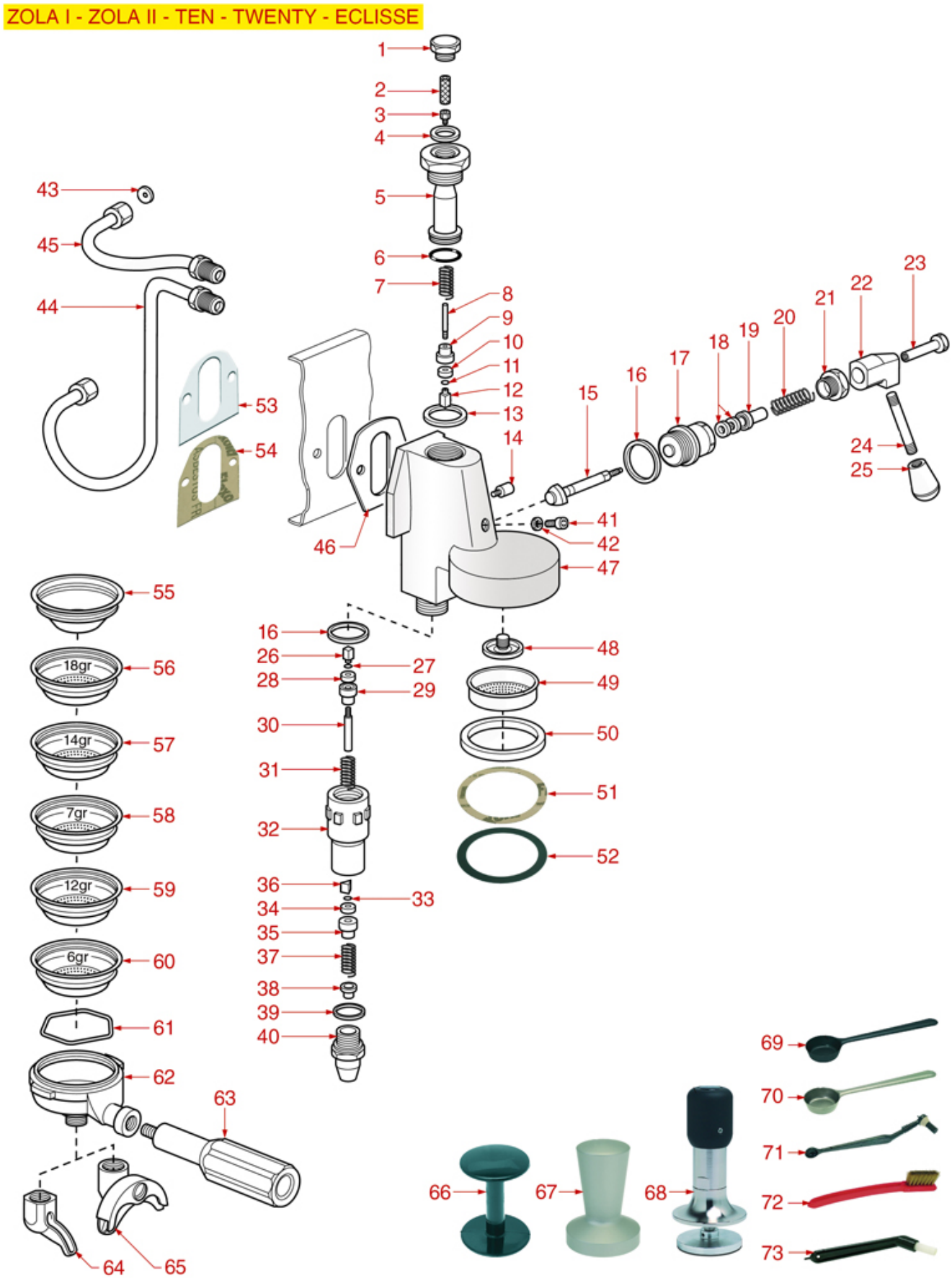

Positions without LF code no.: upon request

GRIMAC

Position	LF code no.	Description
1	1439001	CAP ø 16 mm FOR BREW GROUP
2	1160517	WATER FILTER ø 8.5x22 mm
3	1501522	NOZZLE M6x1 HOLE ø 0,75 mm
4	1186326	PTFE FLAT GASKET ø 22x16x2 mm
5	1027016	UPPER CHROMIUM-PLATED SLEEVE
6	1186591	O-RING 0128 VITON
7	1250536	SPRING ø 13x42 mm
8	1250513	SPINDLE FOR GASKET HOLDER 40 mm
10	1186311	NBR FLAT GASKET ø 13x4x4 mm
12	1324303	SQUARE PIN 10.1 mm 6x6 mm M3
13	1186307	PTFE FLAT GASKET ø 36x30x2 mm
16	1186307	PTFE FLAT GASKET ø 36x30x2 mm
17	1349022	CAMS CHROMIUM-PLATED FITTING
18	1186300	FLAT GASKET ø 15x7.3x4 mm EPDM
19	1186313	CAM GUIDE BUSHING
21	1439533	STUFFING GLAND CHROME-PLATED FITTING
22	1191022	CHROMIUM-PLATED CAM
25	1241401	KNOB M8x1
28	1186311	NBR FLAT GASKET ø 13x4x4 mm
31	1250536	SPRING ø 13x42 mm
32	1027002	OUTLET CHROMIUM-PLATED SLEEVE
34	1186935	FLAT EPDM GASKET ø 13x4x4 mm
37	1250656	OUTLET SPRING ø 14.5x35 mm
38	1349536	DRAIN JET SWIRL
39	1186117	PTFE FLAT GASKET ø 26x21x2 mm
40	1349537	DRAIN CHROMIUM-PLATED FITTING
41	1184804	CYLINDER HEAD SCREW M6x8
42	3528010	FLAT WASHER M6
46	1186502	COFFEE GROUP GASKET 79x71x2 mm
48	1501561	GROUP SPRAY NOZZLE ø 30 mm M10x1
49	1081016	SHOWER SCREEN ø 60 mm
49	1081116	SHOWER SCREEN ø 60 mm
49	1081516	SHOWER ø 60 mm
50	1186891	FILTER HOLDER GASKET ø 73x57x8 mm
51	1190001	PAPER SHIM ø 73x59x0.8 mm
52	1190002	RUBBER SHIM ø 73x59x1 mm EPDM
53	1186508	COFFEE GROUP GASKET 77x73x2 mm
54	1186384	COFFEE GROUP GASKET 80x70x2 mm
55	1160339	BLIND FILTER
56	1160345	2 CUPS FILTER 18 gr
57	1160337	2-CUP FILTER 14 GRAMS
58	1160335	1 CUP FILTER 7 g
59	1160252	2-CUP FILTER 12 GRAMS
60	1160251	1 CUP FILTER 6 g
61	1250101	FILTER BLOCKING SPRING ø 1,00 mm INOX
62	1165022	FILTER HOLDER COFFEE MACHINES
63	1241504	FILTER HOLDER HANDLE M12
64	1022501	SINGLE SPOUT ø 3/8"
65	1022502	DOUBLE SPOUT ø 3/8"
66	1385002	NYLON COFFEE TAMPER ø 50/57 mm
67	1385053	ANODISED ALUMINUM TAMPER ø 58 mm
68	1385600	DYNAMOMETRIC MANUAL COFFEE TAMPER ø 57mm
69	1069001	PLASTIC MEASURING SPOON 20 ml
70	1069002	STAINLESS STEEL MEASURING SPOON 20 ml
71	1384003	BLACK SHOWER CLEANING BRUSH
71	1384011	RED SHOWER CLEANING BRUSH
71	1384012	ORANGE SHOWER CLEANING BRUSH
72	1384002	BRUSH FOR MAINTENANCE
73	1384001	BRUSH FOR COFFEE SHOWER

G10 BREW GROUP

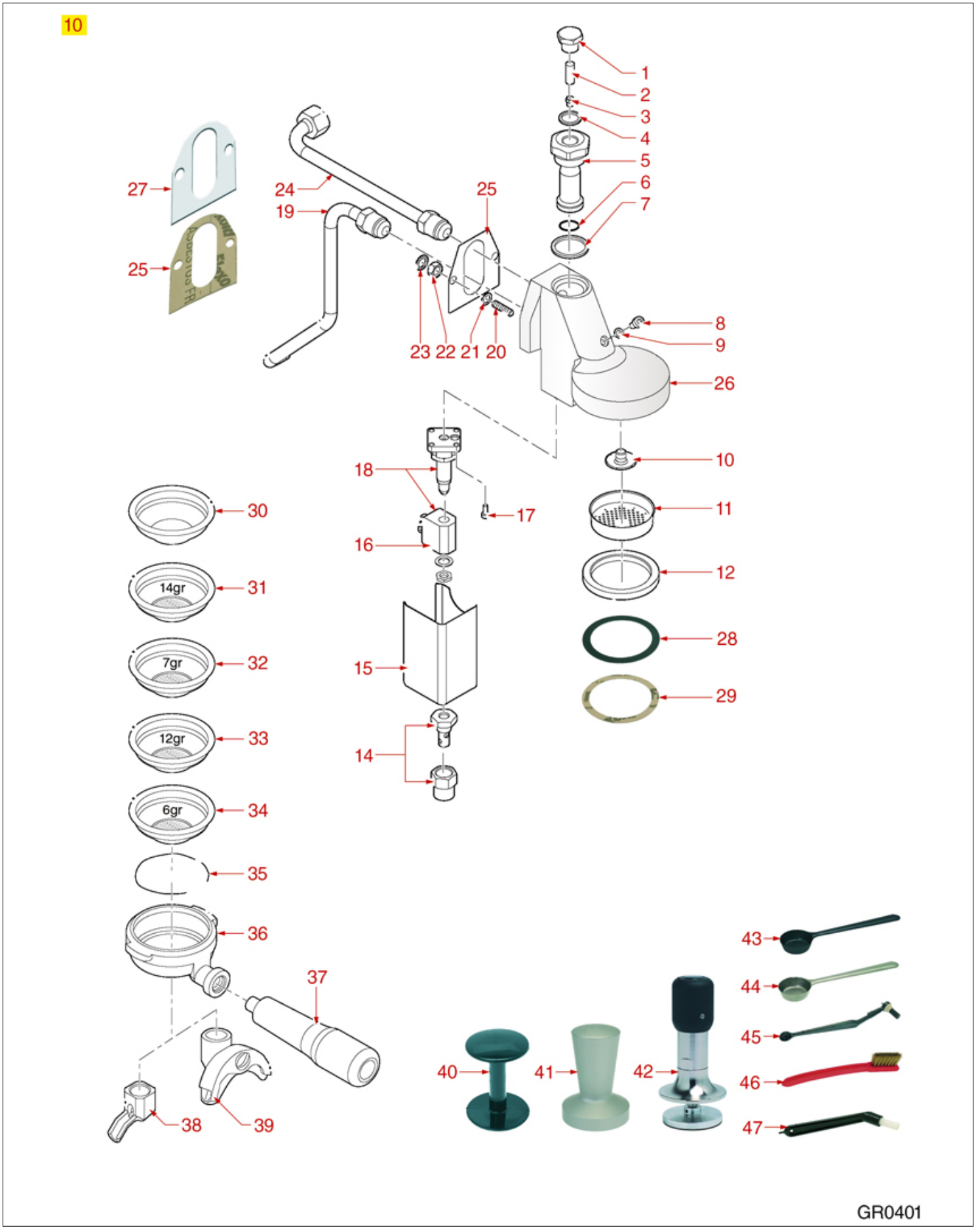

Positions without LF code no.: upon request

GRIMAC

Position	LF code no.	Description
1	1439001	CAP ø 16 mm FOR BREW GROUP
2	1160517	WATER FILTER ø 8.5x22 mm
3	1501541	NOZZLE M6x1 HOLE ø 0,8 mm
4	1186326	PTFE FLAT GASKET ø 22x16x2 mm
5	1027016	UPPER CHROMIUM-PLATED SLEEVE
6	1186472	O-RING 04075 EPDM
7	1186307	PTFE FLAT GASKET ø 36x30x2 mm
8	1184804	CYLINDER HEAD SCREW M6x8
9	3528010	FLAT WASHER M6
10	1501561	GROUP SPRAY NOZZLE ø 30 mm M10x1
11	1081016	SHOWER SCREEN ø 60 mm
11	1081116	SHOWER SCREEN ø 60 mm
11	1081516	SHOWER ø 60 mm
12	1186891	FILTER HOLDER GASKET ø 73x57x8 mm
13	1349007	DRAIN CHROMIUM-PLATED FITTING
16	1120332	COIL LUCIFER/PARKER 220/240V 9W 50Hz
16	3120032	COIL PARKER ZB09 9W 220/240V 50/60Hz
17	1455034	CYLINDER HEAD SCREW M4x10
18	1120330	3-WAY SOLENOID VALVE LUCIFER 240V 50Hz
18	1120335	3-WAY SOLENOID VALVE PARKER 230V 50/60Hz
25	1186384	COFFEE GROUP GASKET 80x70x2 mm
27	1186508	COFFEE GROUP GASKET 77x73x2 mm
28	1190002	RUBBER SHIM ø 73x59x1 mm EPDM
29	1190001	PAPER SHIM ø 73x59x0.8 mm
30	1160339	BLIND FILTER
31	1160337	2-CUP FILTER 14 GRAMS
32	1160335	1 CUP FILTER 7 g
33	1160252	2-CUP FILTER 12 GRAMS
34	1160251	1 CUP FILTER 6 g
35	1250101	FILTER BLOCKING SPRING ø 1,00 mm INOX
36	1165022	FILTER HOLDER COFFEE MACHINES
37	1241504	FILTER HOLDER HANDLE M12
38	1022501	SINGLE SPOUT ø 3/8"
39	1022521	LONG DOUBLE SPOUT ø 3/8"
40	1385002	NYLON COFFEE TAMPER ø 50/57 mm
41	1385053	ANODISED ALUMINUM TAMPER ø 58 mm
42	1385600	DYNAMOMETRIC MANUAL COFFEE TAMPER ø 57mm
43	1069001	PLASTIC MEASURING SPOON 20 ml
44	1069002	STAINLESS STEEL MEASURING SPOON 20 ml
45	1384003	BLACK SHOWER CLEANING BRUSH
45	1384011	RED SHOWER CLEANING BRUSH
45	1384012	ORANGE SHOWER CLEANING BRUSH
46	1384002	BRUSH FOR MAINTENANCE
47	1384001	BRUSH FOR COFFEE SHOWER

G11 BREW GROUP

G11

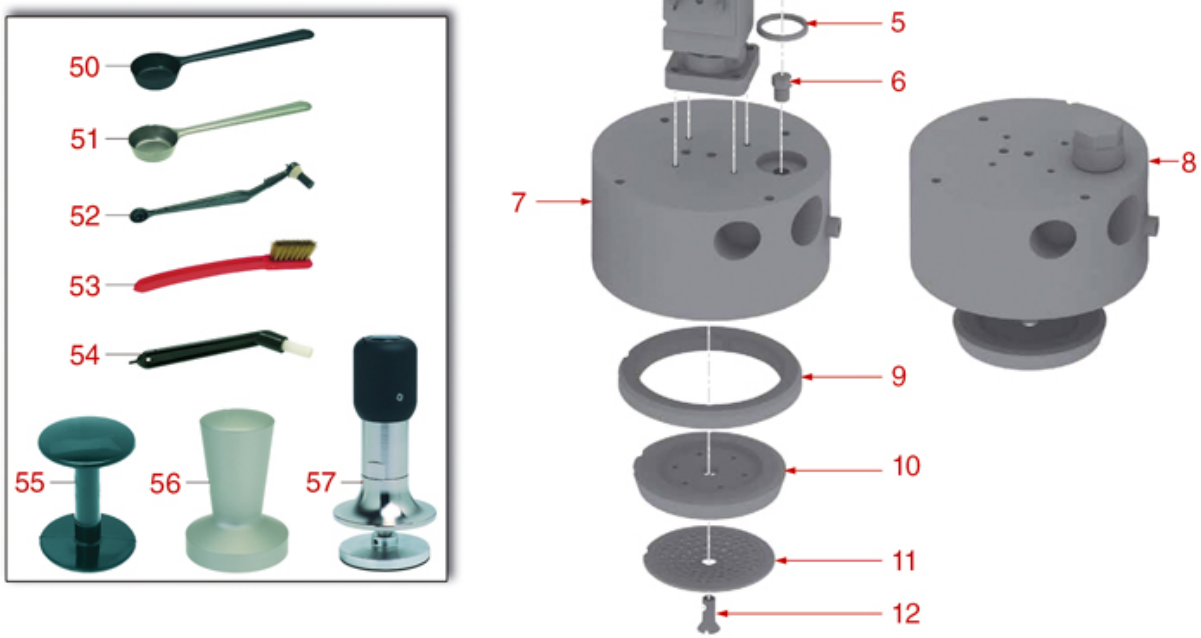

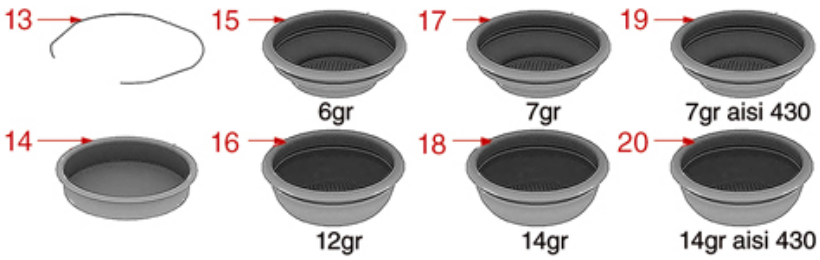

GR0501

Positions without LF code no.: upon request

GRIMAC

Position	LF code no.	Description
1	1349651	PIPETTE FITTING 90°
2	1120330	3-WAY SOLENOID VALVE LUCIFER 240V 50Hz
2	1120335	3-WAY SOLENOID VALVE PARKER 230V 50/60Hz
3	1439532	CAP ø 3/8"M FOR BREW GROUP
4	1160517	WATER FILTER ø 8.5x22 mm
6	1501522	NOZZLE M6x1 HOLE ø 0,75 mm
9	1186622	GASKET FILTER HOLDER ø 72x56x8 mm
10	1086595	SHOWER HOLDER DIFFUSER
11	1081007	SHOWER ø 51.5 mm
12	1528012	CYLINDER HEAD SCREW M5x14
13	1250101	FILTER BLOCKING SPRING ø 1,00 mm INOX
14	1160339	BLIND FILTER
15	1160251	1 CUP FILTER 6 g
16	1160252	2-CUP FILTER 12 GRAMS
17	1160335	1 CUP FILTER 7 g
18	1160337	2-CUP FILTER 14 GRAMS
19	1160281	1-CUP FILTER 7 gr - BASIC QUALITY
20	1160282	2-CUP FILTER 14 GRAMS - BASIC QUALITY
21	1165040	1 CUP FILTER HOLDER ASSEMBLY FIORENZATO
22	1165042	2 CUPS FILTER HOLDER ASSEMBLY FIORENZATO
23	1165022	FILTER HOLDER COFFEE MACHINES
24	1022502	DOUBLE SPOUT ø 3/8"
25	1022501	SINGLE SPOUT ø 3/8"
26	1241504	FILTER HOLDER HANDLE M12

MIA WATER/STEAM TAP

MIA

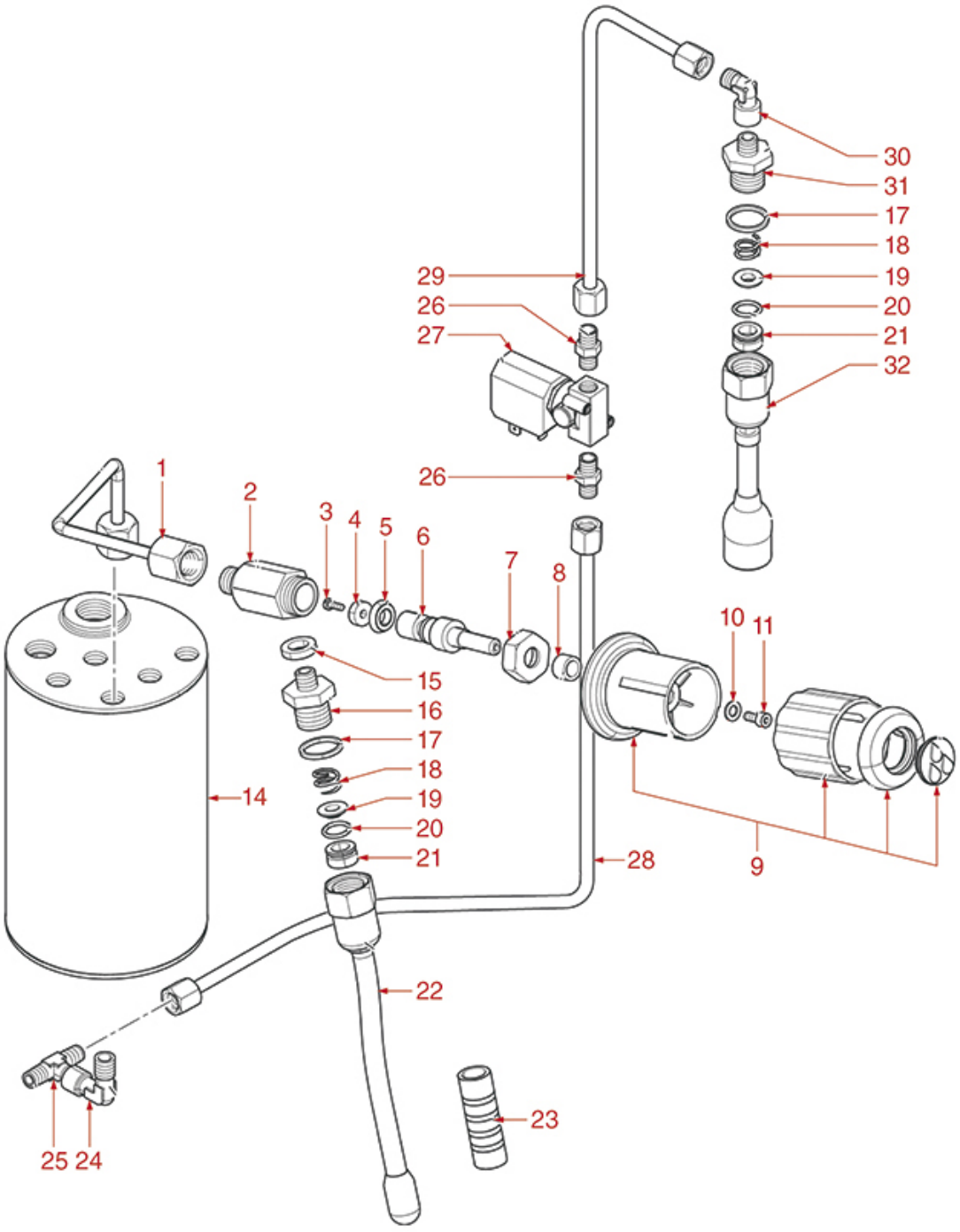

0+100°C	0+100°C	INOX 18/10	---	100	INOX 18/10	0,20L 2 cups	200	INOX 18/10	---	300	INOX 18/10	0,25L 2 cups	400
			---	101		0,30L 3 cups	201		---	301		0,35L 3 cups	401
			---	102		0,45L 4 cups	202		---	302		0,50L 4 cups	402
			0,60L 6 cups	103		0,60L 6 cups	203		0,60L 6 cups	303		0,75L 6 cups	403
			0,70L 9 cups	104		0,70L 9 cups	204		1,00L 10 cups	304		1,00L 10 cups	404
			1,10L 12 cups	105		1,10L 12 cups	205		1,50L 12 cups	305		1,50L 13 cups	405
50	51		---	106		---	206		2,00L 15 cups	306		---	406

GR1001

Positions without LF code no.: upon request

GRIMAC

Position	LF code no.	Description
4	1186342	FLAT GASKET ø 11x3x4 mm EPDM
5	1186491	LIP SEAL ø 14x7x5 mm
9	1241164	STEAM TAP KNOB
10	1528117	WASHER FLAT LARGE M4
11	1455034	CYLINDER HEAD SCREW M4x10
17	1186201	GASKET FLAT PTFE ø 21x16.8x2 mm
18	1250547	SPRING ø 11.5x16 mm
19	1186334	WASHER
20	1186346	O-RING 02043 EPDM
21	1186680	CONICAL PTFE SEAL ø 14.5x9x8 mm
23	1187501	BURN PREVENTING PIPE HANDGRIP ø 8 mm
24	1349717	NICHEL PLATED L-FITTING ø 1/4"M-1/4"F
25	3349356	NICHEL-PL.T-FITTING ø 1/8"M-1/8"M-1/8"M
27	1120501	2-WAY SOLENOID VALVE M&M 230/240V 50Hz
30	1349716	NICHEL PLATED L-FITTING ø 1/8"M-1/8"F
32	1549023	COMPLETE WATER PIPE
50	1394553	ANALOGICAL THERMOMETER ø 25 mm
51	1394554	ANALOG THERMOMETER ø 45 mm
103	1024051	SERVING COFFEE POT PRATIKA 0.60 L
104	1024052	SERVING COFFEE POT PRATIKA 0.70 L
105	1024053	SERVING COFFEE POT PRATIKA 1.10 L
200	1024001	MILK PITCHER PRATIKA 0.20 L
201	1024002	MILK PITCHER PRATIKA 0.30 L
202	1024003	MILK PITCHER PRATIKA 0.45 L
203	1024004	MILK PITCHER PRATIKA 0.60 L
204	1024005	MILK PITCHER PRATIKA 0.70 L
205	1024006	MILK PITCHER PRATIKA 1.10 L
302	1224901	MILK JUG 0.35 L
303	1224902	MILK JUG 0.60 L
304	1224903	MILK JUG 1 L
305	1224904	MILK JUG 1.5 L
400	1224014	MILK PITCHER EUROPA WITH SPOUT 0.25 L
401	1224015	MILK PITCHER EUROPA WITH SPOUT 0.35 L
402	1224010	MILK PITCHER EUROPA WITH SPOUT 0.50 L
403	1224011	MILK PITCHER EUROPA WITH SPOUT 0.75 L
404	1224012	MILK PITCHER EUROPA WITH SPOUT 1 L
405	1224013	MILK PITCHER EUROPA WITH SPOUT 1.5 L

ZOLAI-ZOLAII WATER/STEAM TAP

ZOLA I

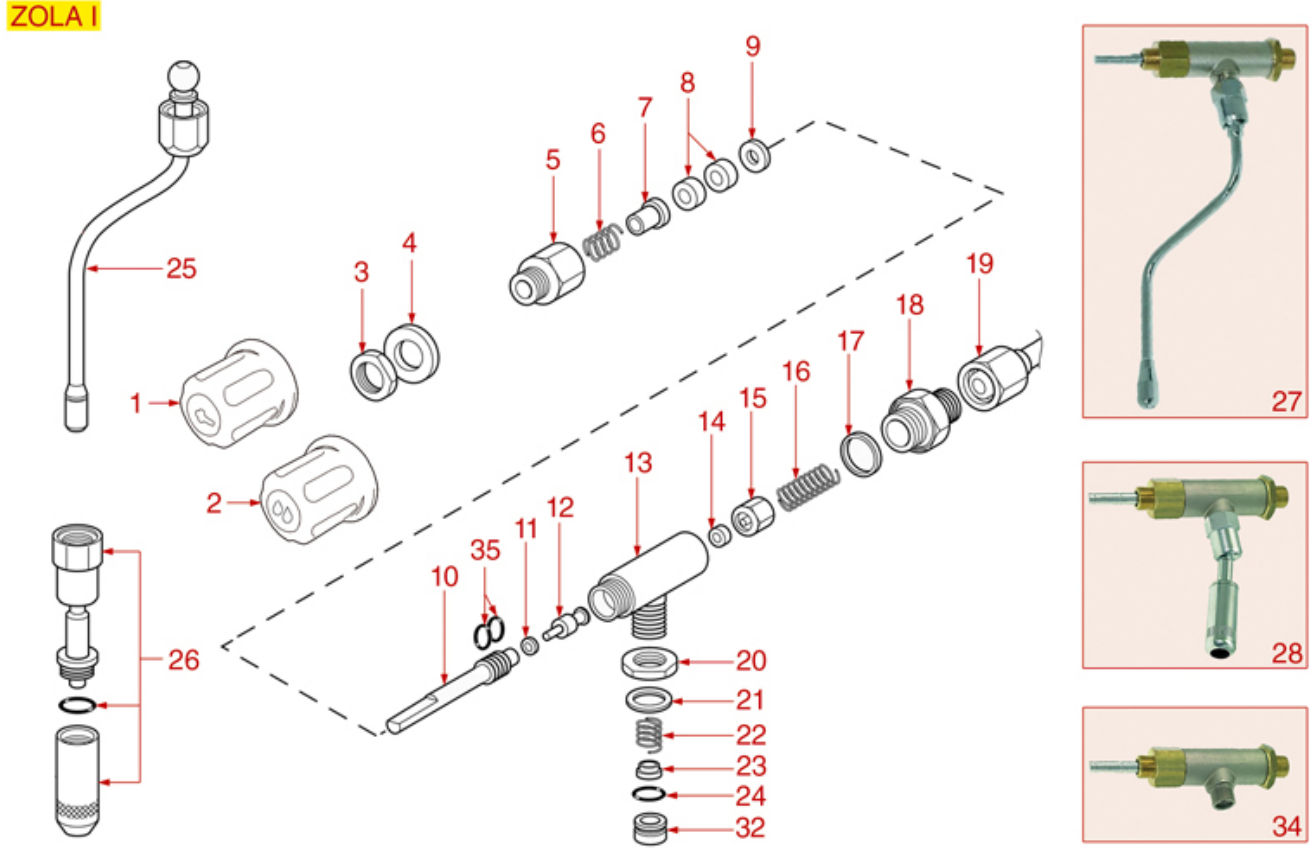

ZOLA II - TEN

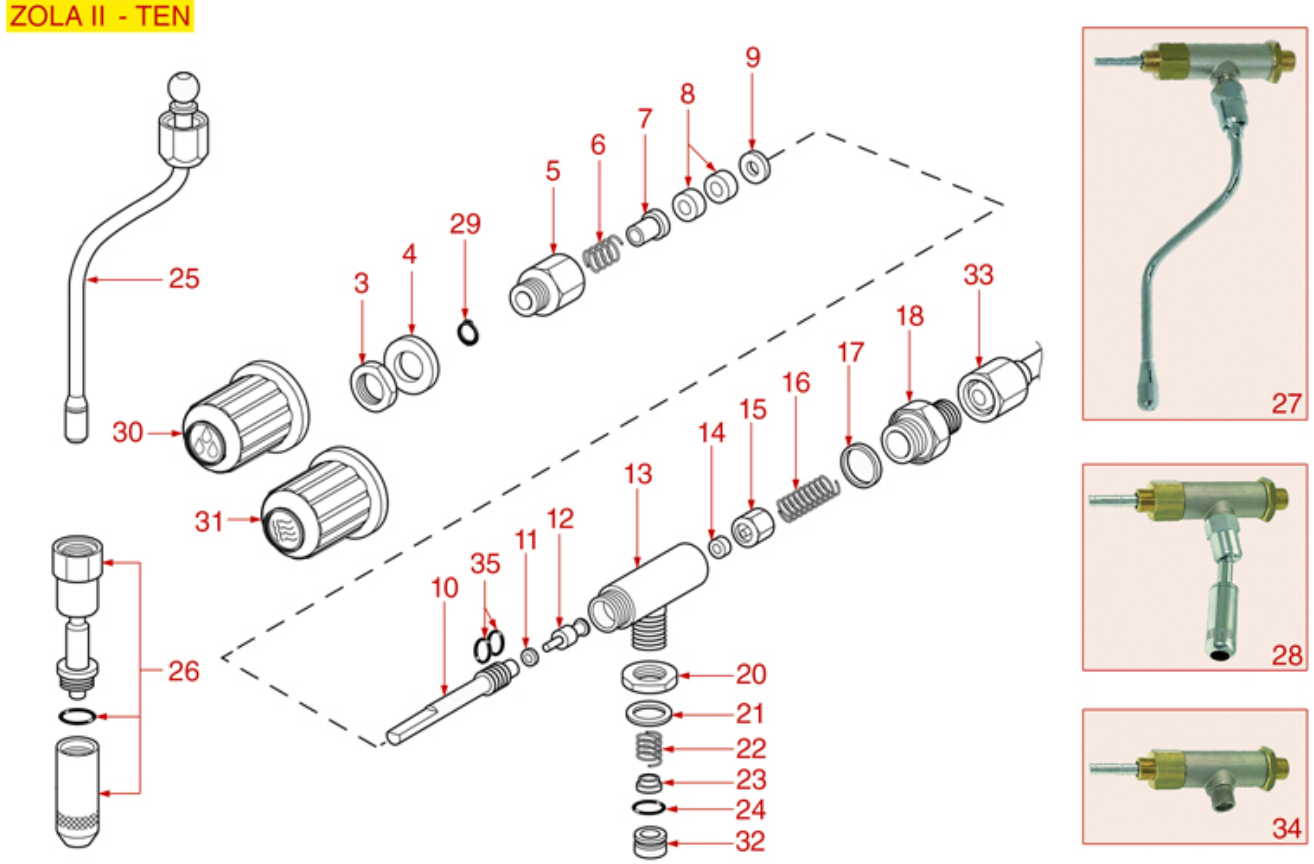

GR1101

Positions without LF code no.: upon request

GRIMAC

Position	LF code no.	Description
1	1241333	STEAM TAP KNOB
2	1241609	WATER TAP KNOB
6	1250652	TAP SPRING ø 15x18 mm
7	1186322	TAP ROD BUSHING
8	1186300	FLAT GASKET ø 15x7.3x4 mm EPDM
8	1186756	FLAT VITON GASKET ø 15.5x7.5x4 mm
9	1186681	BRASS WASHER ø 15x8x2 mm FLAT
10	1324300	SPINDLE FOR WATER/STEAM TAP
12	1324301	LONG SPINDLE
14	1186311	NBR FLAT GASKET ø 13x4x4 mm
15	1186122	GASKET HOLDER FOR TAP
16	1250157	TAP SPRING ø 12.5x30 mm
17	1186117	PTFE FLAT GASKET ø 26x21x2 mm
21	1186314	PTFE FLAT GASKET ø 22x17x2 mm
22	1250547	SPRING ø 11.5x16 mm
23	1186334	WASHER
24	1186346	O-RING 02043 EPDM
25	1449698	STEAM PIPE COMPLETE
26	1449699	COMPLETE WATER PIPE
27	1348703	COMPLETE STEAM TAP
29	1348705	CIRCLIP E- 8
30	1241606	STEAM TAP KNOB
31	1241608	WATER TAP KNOB
32	1186680	CONICAL PTFE SEAL ø 14.5x9x8 mm
34	1348707	COMPLETE STEAM TAP
35	1186236	O-RING 03043 VITON

ZOLAII WATER/STEAM TAP

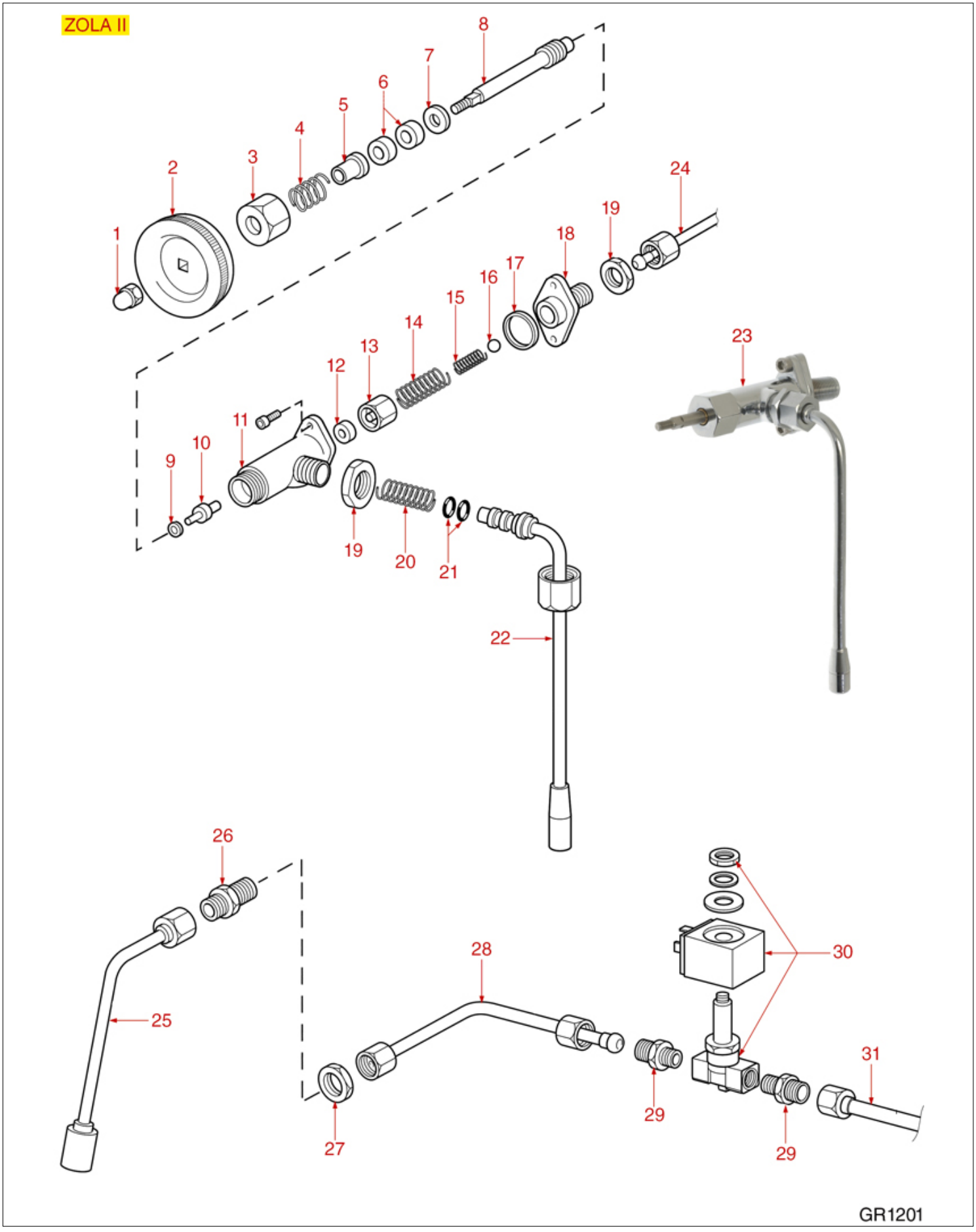

Positions without LF code no.: upon request

GRIMAC

Position	LF code no.	Description
2	1241461	WATER/STEAM TAP KNOB
4	1250652	TAP SPRING ø 15x18 mm
5	1186322	TAP ROD BUSHING
6	1186312	EPDM FLAT GASKET ø 15.5x7.5x4 mm
7	1186732	WASHER ø 15x8.4x1 mm
8	1324086	TAP HANDLE SPINDLE
9	3528238	FLAT WASHER M4
10	1324026	TAP SPINDLE
12	1186311	NBR FLAT GASKET ø 13x4x4 mm
13	1186122	GASKET HOLDER FOR TAP
14	1250157	TAP SPRING ø 12.5x30 mm
15	1250202	SPRING ø 8x30 mm
16	1323003	STAINLESS STEEL BALL ø 8 mm
17	1186323	PTFE FLAT GASKET ø 24x18x2 mm
20	1250365	SPRING ø 11.5x30 mm FOR TAP
21	1186556	O-RING R6 EPDM
22	1449068	STEAM PIPE COMPLETE
23	1348842	STEAM TAP ASSY
25	1449697	COMPLETE WATER PIPE
26	1349705	COUPLING ø 3/8"M-3/8"M LOAD EXTENSION
29	1349112	FITTING ø 1/4"M-3/8"M

TWENTY-ECLISSE WATER/STEAM TAP

TWENTY

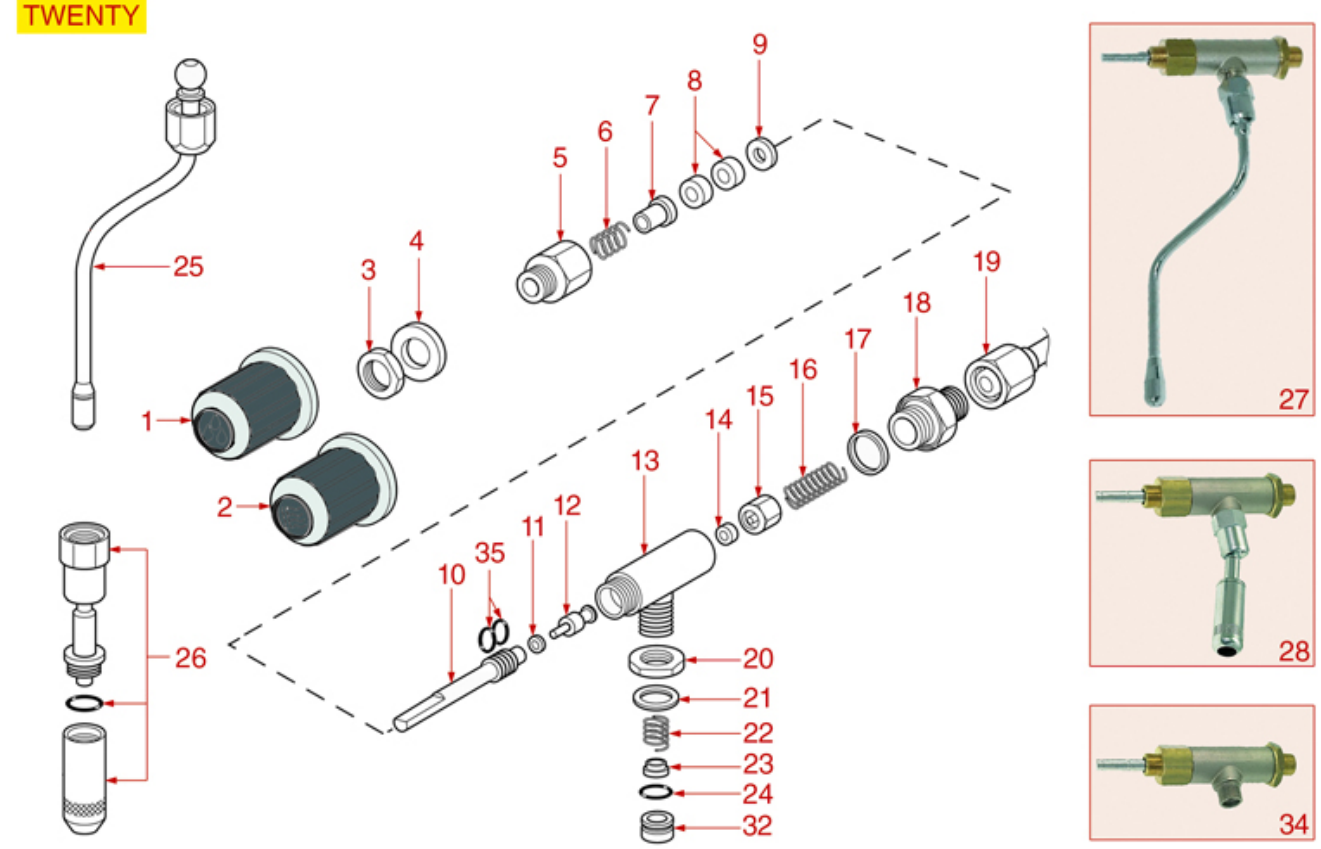

ECLISSE

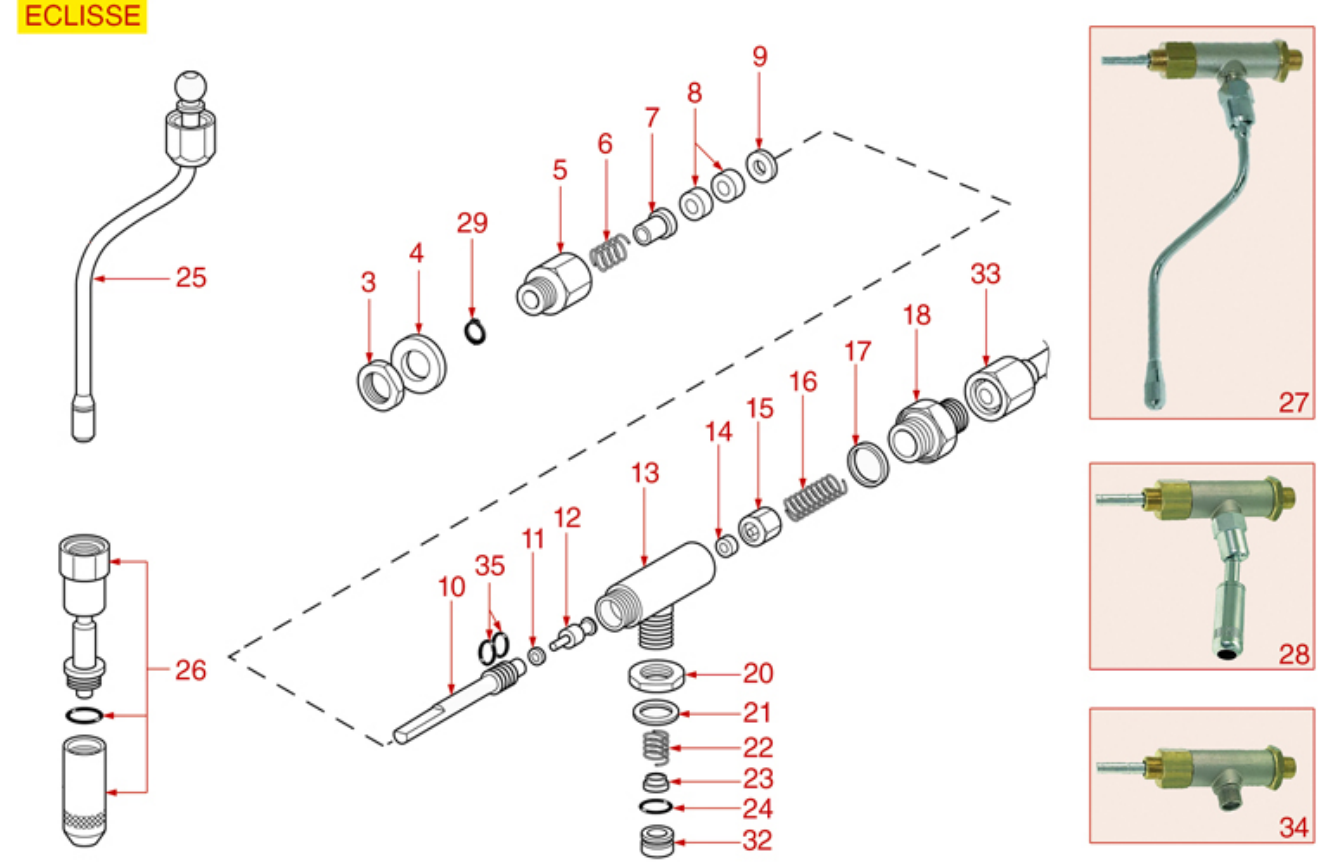

GR1301

Positions without LF code no.: upon request

GRIMAC

Position	LF code no.	Description
1	1241165	WATER TAP KNOB
2	1241164	STEAM TAP KNOB
6	1250652	TAP SPRING ø 15x18 mm
7	1186322	TAP ROD BUSHING
8	1186300	FLAT GASKET ø 15x7.3x4 mm EPDM
9	1186681	BRASS WASHER ø 15x8x2 mm FLAT
10	1324300	SPINDLE FOR WATER/STEAM TAP
12	1324301	LONG SPINDLE
14	1186311	NBR FLAT GASKET ø 13x4x4 mm
15	1186122	GASKET HOLDER FOR TAP
16	1250157	TAP SPRING ø 12.5x30 mm
17	1186117	PTFE FLAT GASKET ø 26x21x2 mm
21	1186314	PTFE FLAT GASKET ø 22x17x2 mm
22	1250547	SPRING ø 11.5x16 mm
23	1186334	WASHER
24	1186346	O-RING 02043 EPDM
25	1449698	STEAM PIPE COMPLETE
26	1449699	COMPLETE WATER PIPE
27	1348703	COMPLETE STEAM TAP
29	1348705	CIRCLIP E- 8
32	1186680	CONICAL PTFE SEAL ø 14.5x9x8 mm
34	1348707	COMPLETE STEAM TAP
35	1186236	O-RING 03043 VITON

G10 WATER/STEAM TAP

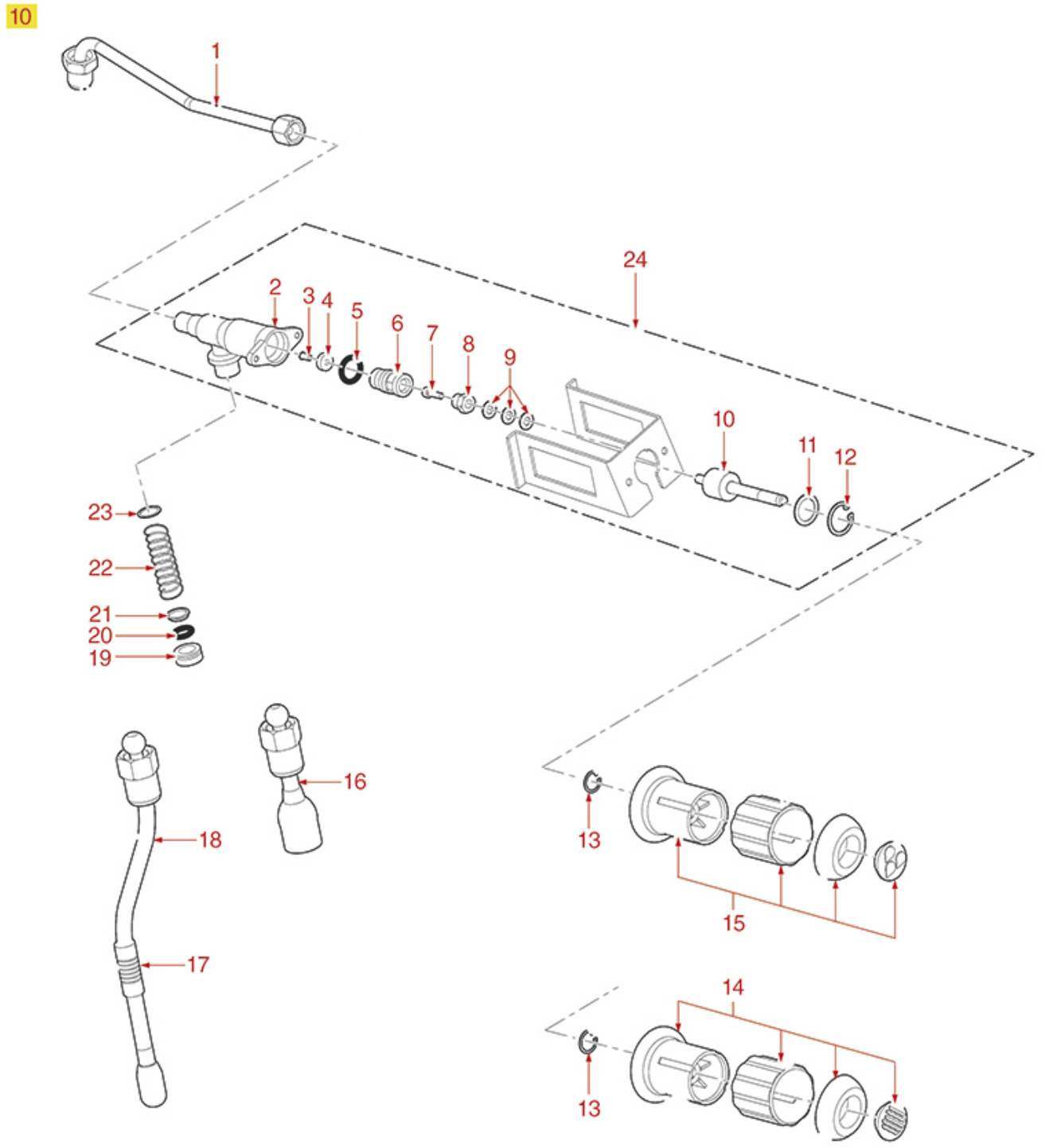

0+100°C	0+100°C		---	100		0,20L 2 cups	200		---	300		0,25L 2 cups	400
			---	101		0,30L 3 cups	201		---	301		0,35L 3 cups	401
			---	102		0,45L 4 cups	202		---	302		0,50L 4 cups	402
			0,60L 6 cups	103		0,60L 6 cups	203		0,60L 6 cups	303		0,75L 6 cups	403
			0,70L 9 cups	104		0,70L 9 cups	204		1,00L 10 cups	304		1,00L 10 cups	404
			1,10L 12 cups	105		1,10L 12 cups	205		1,50L 12 cups	305		1,50L 13 cups	405
50	51	INOX 18/10	---	106	INOX 18/10	---	206	INOX 18/10	2,00L 15 cups	306	INOX 18/10	---	406

GR1401

Positions without LF code no.: upon request

GRIMAC

Position	LF code no.	Description
4	1186342	FLAT GASKET ø 11x3x4 mm EPDM
7	1184006	LOW CYLINDER HEAD SCREW M4x12
9	3528010	FLAT WASHER M6
11	1186299	WASHER ø 21x16x1 mm
12	1348029	SEEGER RING J-19
13	1348705	CIRCLIP E- 8
14	1241165	WATER TAP KNOB
15	1241164	STEAM TAP KNOB
16	1449699	COMPLETE WATER PIPE
17	1187501	BURN PREVENTING PIPE HANDGRIP ø 8 mm
18	1449698	STEAM PIPE COMPLETE
19	1186680	CONICAL PTFE SEAL ø 14.5x9x8 mm
20	1186346	O-RING 02043 EPDM
21	1186288	WATER TAP FITTING
22	1250203	SPRING ø 11x30 mm
23	1186201	GASKET FLAT PTFE ø 21x16.8x2 mm
24	1348122	WATER/STEAM TAP
50	1394553	ANALOGICAL THERMOMETER ø 25 mm
51	1394554	ANALOG THERMOMETER ø 45 mm
103	1024051	SERVING COFFEE POT PRATIKA 0.60 L
104	1024052	SERVING COFFEE POT PRATIKA 0.70 L
105	1024053	SERVING COFFEE POT PRATIKA 1.10 L
200	1024001	MILK PITCHER PRATIKA 0.20 L
201	1024002	MILK PITCHER PRATIKA 0.30 L
202	1024003	MILK PITCHER PRATIKA 0.45 L
203	1024004	MILK PITCHER PRATIKA 0.60 L
204	1024005	MILK PITCHER PRATIKA 0.70 L
205	1024006	MILK PITCHER PRATIKA 1.10 L
302	1224901	MILK JUG 0.35 L
303	1224902	MILK JUG 0.60 L
304	1224903	MILK JUG 1 L
305	1224904	MILK JUG 1.5 L
400	1224014	MILK PITCHER EUROPA WITH SPOUT 0.25 L
401	1224015	MILK PITCHER EUROPA WITH SPOUT 0.35 L
402	1224010	MILK PITCHER EUROPA WITH SPOUT 0.50 L
403	1224011	MILK PITCHER EUROPA WITH SPOUT 0.75 L
404	1224012	MILK PITCHER EUROPA WITH SPOUT 1 L
405	1224013	MILK PITCHER EUROPA WITH SPOUT 1.5 L

G11 WATER/STEAM TAP

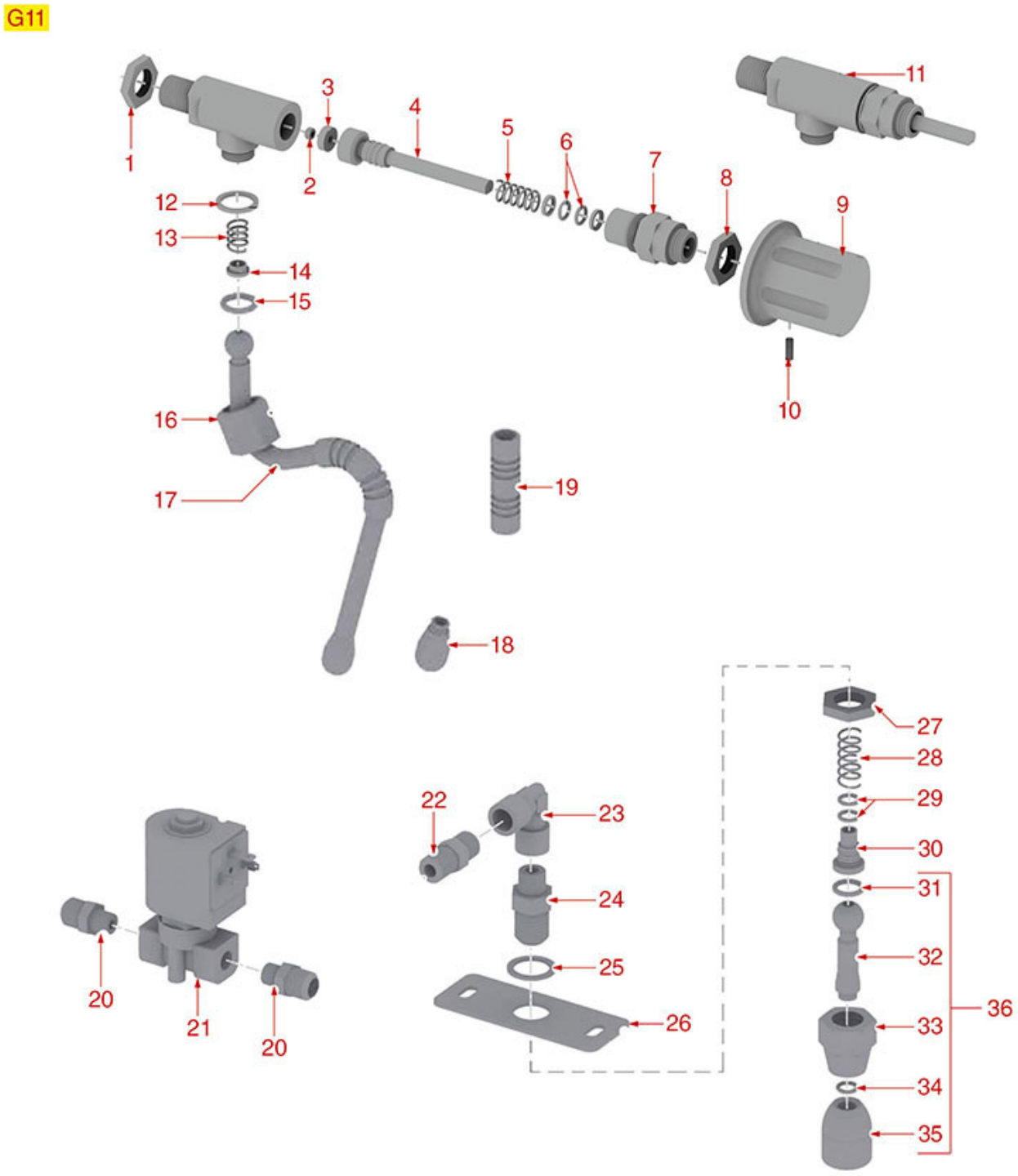

---	100	0,20L 2 cups	200	---	300	0,25L 2 cups	400
---	101	0,30L 3 cups	201	---	301	0,35L 3 cups	401
---	102	0,45L 4 cups	202	---	302	0,50L 4 cups	402
0,60L 6 cups	103	0,60L 6 cups	203	0,60L 6 cups	303	0,75L 6 cups	403
0,70L 9 cups	104	0,70L 9 cups	204	1,00L 10 cups	304	1,00L 10 cups	404
1,10L 12 cups	105	1,10L 12 cups	205	1,50L 12 cups	305	1,50L 13 cups	405
---	106	---	206	2,00L 15 cups	306	---	406

GR1501

Positions without LF code no.: upon request

GRIMAC

Position	LF code no.	Description
3	1186311	NBR FLAT GASKET ø 13x4x4 mm
6	1186556	O-RING R6 EPDM
9	1241333	STEAM TAP KNOB
11	1348211	STEAM TAP
12	1186201	GASKET FLAT PTFE ø 21x16.8x2 mm
13	1250151	SPRING ø 12x15 mm FOR STEAM PIPE
14	1186670	STEAM PIPE ARTICULATION BUSHING ø 12x5mm
15	3060608	O-RING O3050 EPDM
16	1349521	PIPE ARTICULATION FITTING ø 3/8"
17	1449393	STEAM PIPE COMPLETE
18	1449394	STEAM NOZZLE M10x1 4 HOLES
19	1187501	BURN PREVENTING PIPE HANDGRIP ø 8 mm
20	1349111	FITTING ø 1/8"M 1/4"M
21	1120460	2-WAY SOLENOID VALVE LUCIFER 240V 50Hz
22	1349102	FITTING ø 1/4"M-1/4"M
24	1349112	FITTING ø 1/4"M-3/8"M
25	1186620	COPPER FLAT GASKET ø 22x17x1.5 mm
28	1250151	SPRING ø 12x15 mm FOR STEAM PIPE
29	1186556	O-RING R6 EPDM
30	1348213	STEAM PIPE BUSHING
31	1186318	O-RING 03043 EPDM
34	1186556	O-RING R6 EPDM
35	1449332	WATER PIPE NOZZLE
36	1449012	COMPLETE WATER PIPE
50	1394553	ANALOGICAL THERMOMETER ø 25 mm
51	1394554	ANALOG THERMOMETER ø 45 mm
103	1024051	SERVING COFFEE POT PRATIKA 0.60 L
104	1024052	SERVING COFFEE POT PRATIKA 0.70 L
105	1024053	SERVING COFFEE POT PRATIKA 1.10 L
200	1024001	MILK PITCHER PRATIKA 0.20 L
201	1024002	MILK PITCHER PRATIKA 0.30 L
202	1024003	MILK PITCHER PRATIKA 0.45 L
203	1024004	MILK PITCHER PRATIKA 0.60 L
204	1024005	MILK PITCHER PRATIKA 0.70 L
205	1024006	MILK PITCHER PRATIKA 1.10 L
302	1224901	MILK JUG 0.35 L
303	1224902	MILK JUG 0.60 L
304	1224903	MILK JUG 1 L
305	1224904	MILK JUG 1.5 L
400	1224014	MILK PITCHER EUROPA WITH SPOUT 0.25 L
401	1224015	MILK PITCHER EUROPA WITH SPOUT 0.35 L
402	1224010	MILK PITCHER EUROPA WITH SPOUT 0.50 L
403	1224011	MILK PITCHER EUROPA WITH SPOUT 0.75 L
404	1224012	MILK PITCHER EUROPA WITH SPOUT 1 L
405	1224013	MILK PITCHER EUROPA WITH SPOUT 1.5 L

MIA WATER INLET TAP

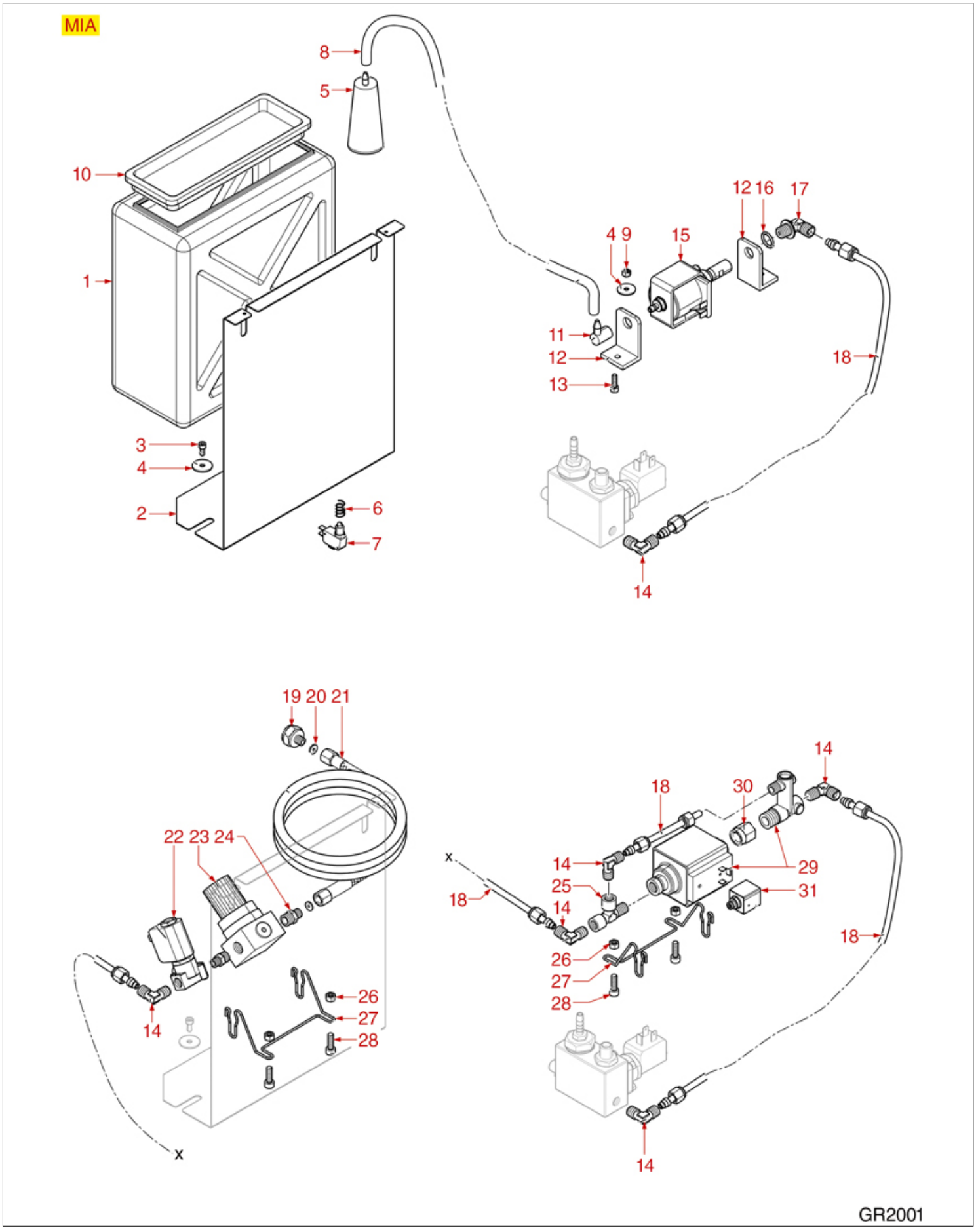

Positions without LF code no.: upon request

GRIMAC

Position	LF code no.	Description
3	1455034	CYLINDER HEAD SCREW M4x10
5	3010303	WATER SOFTENER FOR OCS NICAL 125
8	1449681	SILICONE HOSE ø 4x7 SHORE 60 - 5 m
9	3528213	HEXAGONAL NUT MID M5
11	1349651	PIPETTE FITTING 90°
12	1331023	SQUARE DAMPER EX-EP-EK-EA
13	5014713	CYLINDER HEAD SCREW M5x16
14	1349250	"L"COUPLING 1/8"M-1/8"M ø 6 mm
15	1122601	VIBRATORY PUMP EX5 41W 120V 60Hz
15	1122735	VIBRATORY PUMP EX5 48W 230V 50Hz
16	1186411	O-RING 02031 EPDM
17	1349251	"L"COUPLING ø 1/8"M-1/8"M COMPLETE
18	1449502	PTFE PIPE ø 4x6 mm - 10 m
20	1186042	ASBESTOS FREE FLAT GASKET ø 9x5x1 mm
21	1449707	FLEX HOSE ø 1/8" Fc x Fc 1500 mm
22	1120501	2-WAY SOLENOID VALVE M&M 230/240V 50Hz
26	3528213	HEXAGONAL NUT MID M5
28	5014713	CYLINDER HEAD SCREW M5x16
29	1331003	VIBRATORY PUMP FLUID-O-TECH 50W 240V

ZOLAI-ZOLAII WATER INLET TAP

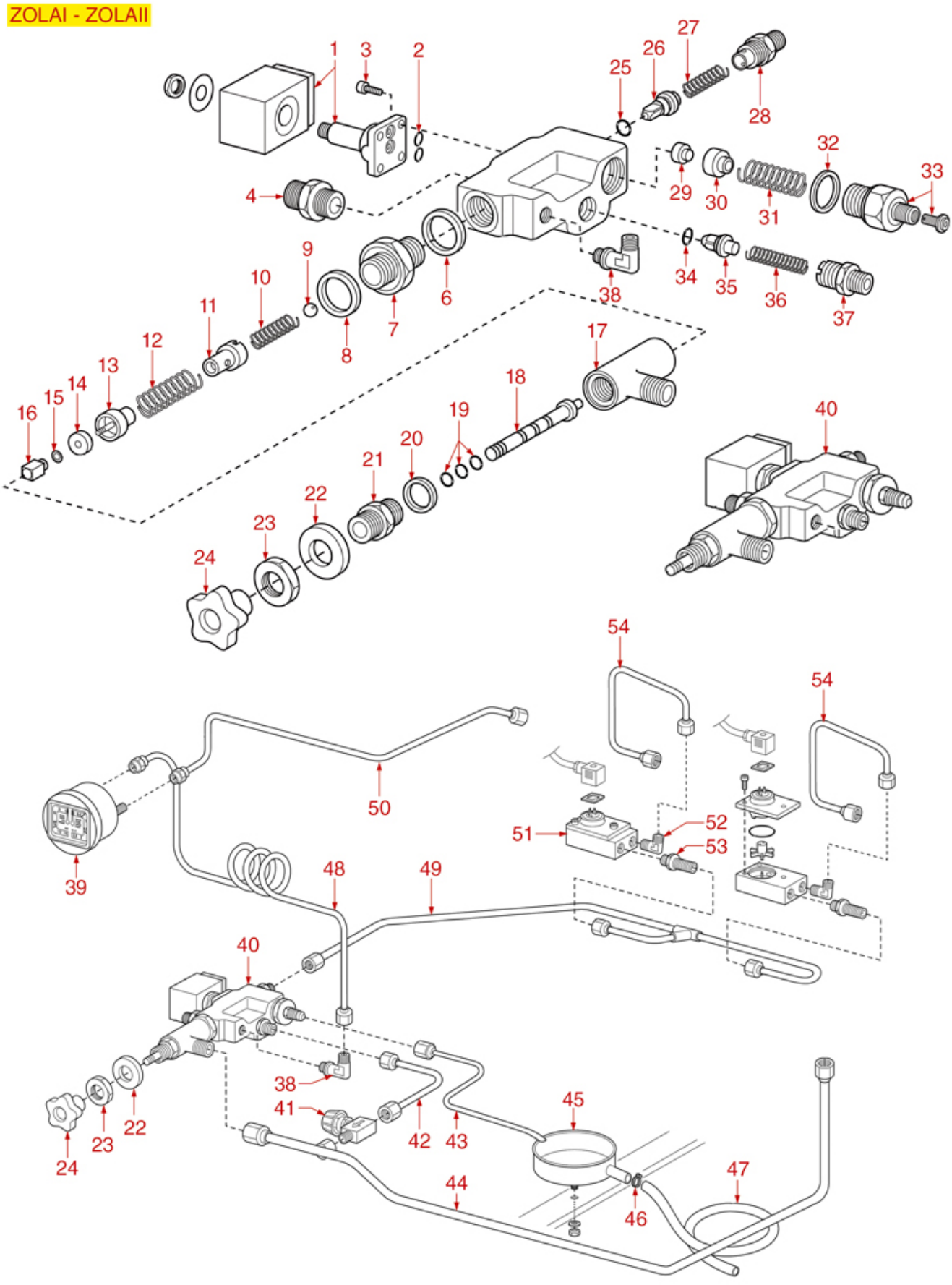

Positions without LF code no.: upon request

GRIMAC

Position	LF code no.	Description
1	1120352	2-WAY SOLENOID VALVE PARKER 230V 50/60Hz
2	1186611	O-RING 02025 RED SILICONE
2	1186612	O-RING 02025 VITON
3	1455034	CYLINDER HEAD SCREW M4x10
6	1186117	PTFE FLAT GASKET ø 26x21x2 mm
8	1186117	PTFE FLAT GASKET ø 26x21x2 mm
9	1323003	STAINLESS STEEL BALL ø 8 mm
12	1250536	SPRING ø 13x42 mm
13	1186309	GASKET HOLDER BUSHING
14	1186311	NBR FLAT GASKET ø 13x4x4 mm
16	1324303	SQUARE PIN 10.1 mm 6x6 mm M3
18	1324302	SPINDLE FOR WATER INLET
19	3243009	O-RING GASKET 0106 EPDM
20	1186314	PTFE FLAT GASKET ø 22x17x2 mm
24	1241603	WATER INLET TAP KNOB
25	1186687	O-RING M 0080-20 VITON
26	1523201	TRIANGULAR NON-RETURN VALVE
29	1186129	FLAT EPDM GASKET ø 15/6x10 mm
30	1186689	GASKET HOLDER FOR TAP
31	1250656	OUTLET SPRING ø 14.5x35 mm
32	1186117	PTFE FLAT GASKET ø 26x21x2 mm
33	1523200	GROUP ADJUSTMENT VALVE
34	1186687	O-RING M 0080-20 VITON
35	1523202	TRIANGULAR NON-RETURN VALVE
39	1245411	BOILER-PUMP PRESSURE GAUGE ø 63 mm
40	1348706	WATER INLET TAP
41	3526699	BALL VALVE ø 1/4" MF
45	1527504	DRAIN TUB ø 80 mm
51	1455067	VOLUMETRIC FLOWMETER GICAR

TEN-TWENTY WATER INLET TAP

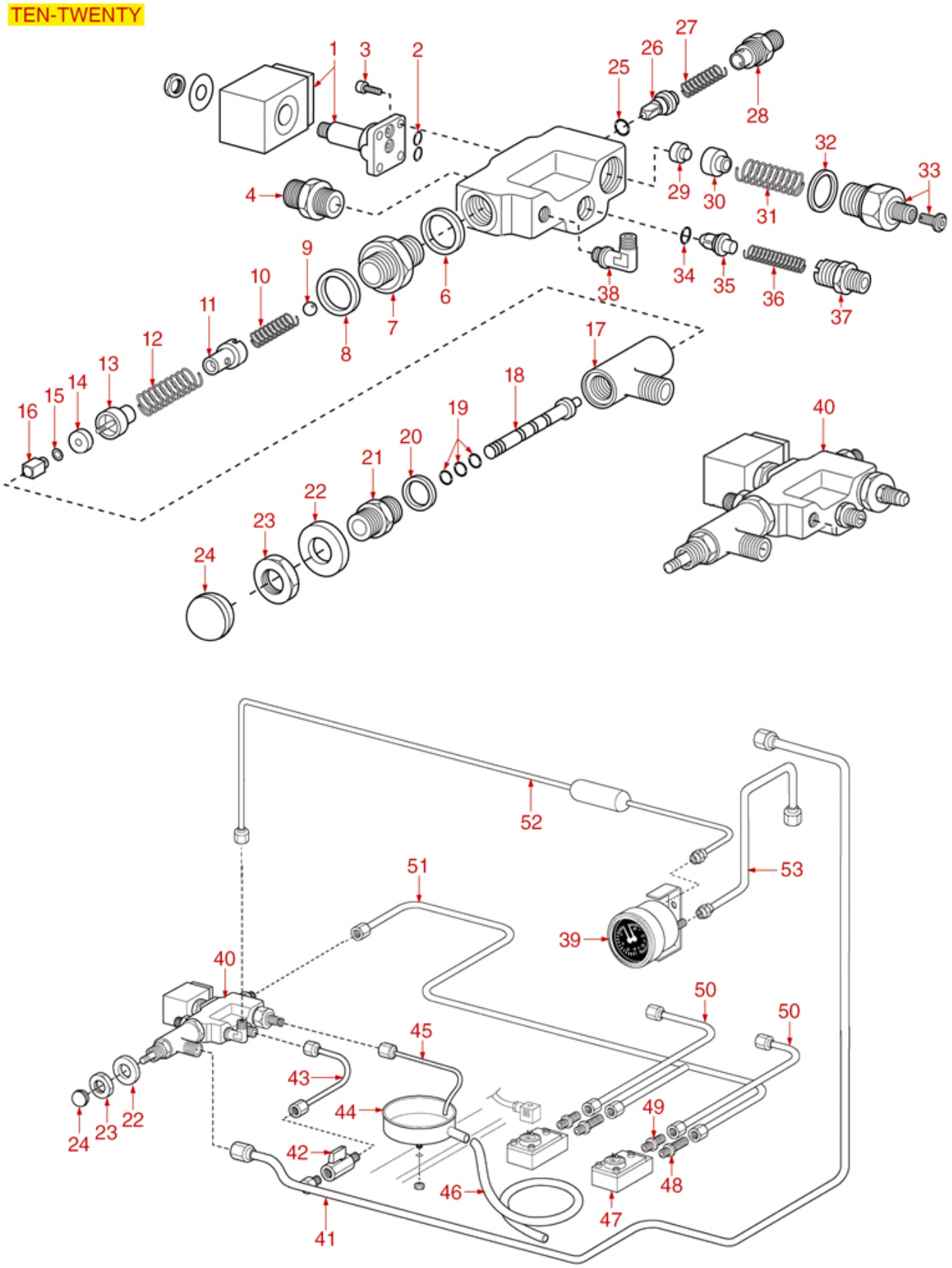

Positions without LF code no.: upon request

GRIMAC

Position	LF code no.	Description
1	1120352	2-WAY SOLENOID VALVE PARKER 230V 50/60Hz
2	1186611	O-RING 02025 RED SILICONE
2	1186612	O-RING 02025 VITON
3	1455034	CYLINDER HEAD SCREW M4x10
6	1186117	PTFE FLAT GASKET ø 26x21x2 mm
8	1186117	PTFE FLAT GASKET ø 26x21x2 mm
9	1323003	STAINLESS STEEL BALL ø 8 mm
12	1250536	SPRING ø 13x42 mm
13	1186309	GASKET HOLDER BUSHING
14	1186311	NBR FLAT GASKET ø 13x4x4 mm
16	1324303	SQUARE PIN 10.1 mm 6x6 mm M3
18	1324302	SPINDLE FOR WATER INLET
19	3243009	O-RING GASKET 0106 EPDM
20	1186314	PTFE FLAT GASKET ø 22x17x2 mm
24	1241605	WATER INLET TAP KNOB
25	1186687	O-RING M 0080-20 VITON
26	1523201	TRIANGULAR NON-RETURN VALVE
29	1186129	FLAT EPDM GASKET ø 15/6x10 mm
30	1186689	GASKET HOLDER FOR TAP
31	1250656	OUTLET SPRING ø 14.5x35 mm
32	1186117	PTFE FLAT GASKET ø 26x21x2 mm
33	1523200	GROUP ADJUSTMENT VALVE
34	1186687	O-RING M 0080-20 VITON
35	1523202	TRIANGULAR NON-RETURN VALVE
39	1245200	BOILER-PUMP PRESSURE GAUGE ø 60 mm
40	1348706	WATER INLET TAP
42	3526699	BALL VALVE ø 1/4" MF
47	1455067	VOLUMETRIC FLOWMETER GICAR
48	1349705	COUPLING ø 3/8"M-3/8"M LOAD EXTENSION

ECLISSE WATER INLET TAP

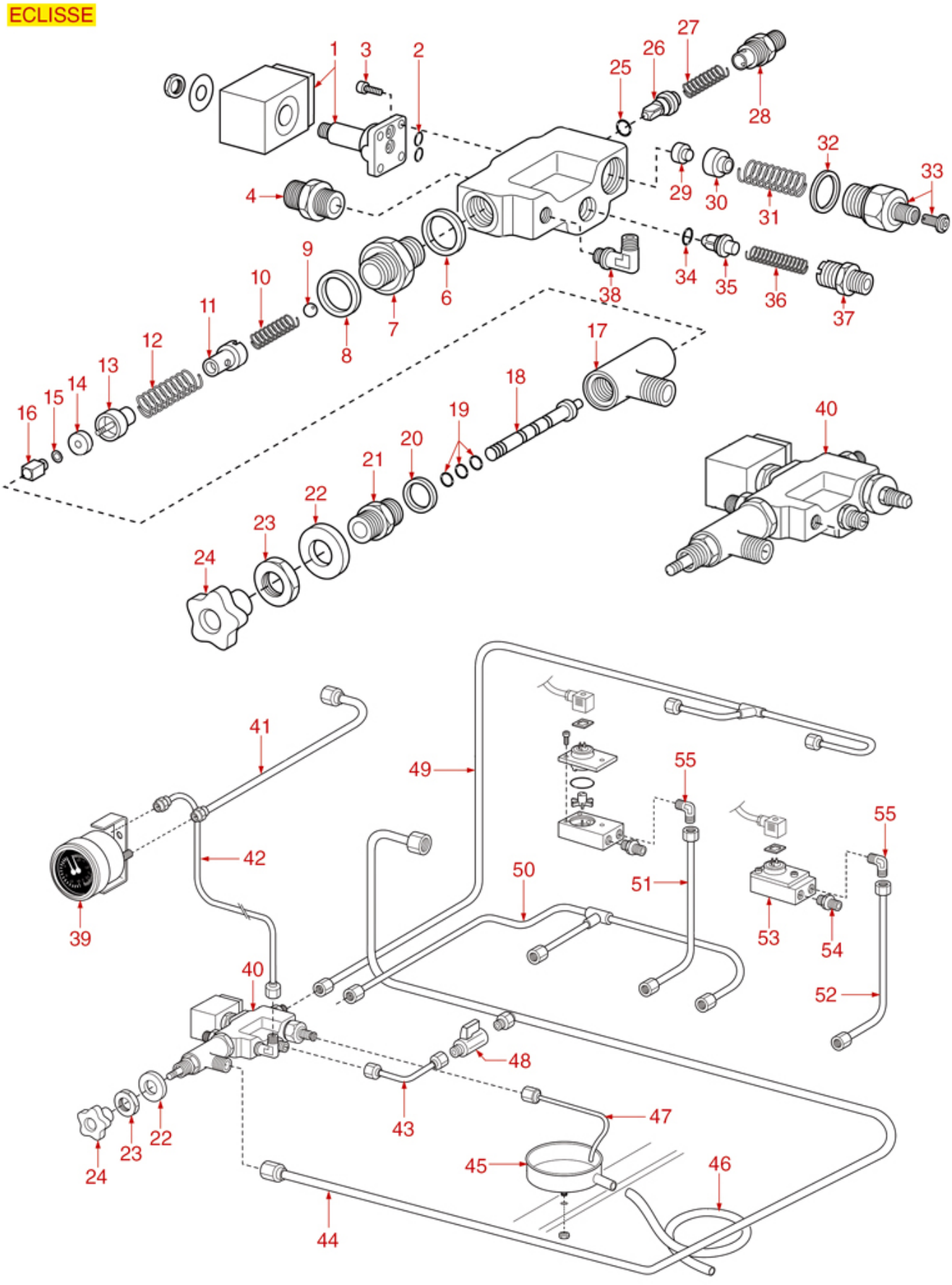

Positions without LF code no.: upon request

GRIMAC

Position	LF code no.	Description
1	1120352	2-WAY SOLENOID VALVE PARKER 230V 50/60Hz
2	1186611	O-RING 02025 RED SILICONE
2	1186612	O-RING 02025 VITON
3	1455034	CYLINDER HEAD SCREW M4x10
6	1186117	PTFE FLAT GASKET ø 26x21x2 mm
8	1186117	PTFE FLAT GASKET ø 26x21x2 mm
9	1323003	STAINLESS STEEL BALL ø 8 mm
12	1250536	SPRING ø 13x42 mm
13	1186309	GASKET HOLDER BUSHING
14	1186311	NBR FLAT GASKET ø 13x4x4 mm
16	1324303	SQUARE PIN 10.1 mm 6x6 mm M3
18	1324302	SPINDLE FOR WATER INLET
19	3243009	O-RING GASKET 0106 EPDM
20	1186314	PTFE FLAT GASKET ø 22x17x2 mm
24	1241605	WATER INLET TAP KNOB
25	1186687	O-RING M 0080-20 VITON
26	1523201	TRIANGULAR NON-RETURN VALVE
29	1186129	FLAT EPDM GASKET ø 15/6x10 mm
30	1186689	GASKET HOLDER FOR TAP
31	1250656	OUTLET SPRING ø 14.5x35 mm
32	1186117	PTFE FLAT GASKET ø 26x21x2 mm
33	1523200	GROUP ADJUSTMENT VALVE
34	1186687	O-RING M 0080-20 VITON
35	1523202	TRIANGULAR NON-RETURN VALVE
39	1245200	BOILER-PUMP PRESSURE GAUGE ø 60 mm
40	1348706	WATER INLET TAP
48	3526699	BALL VALVE ø 1/4" MF

G10 WATER INLET TAP

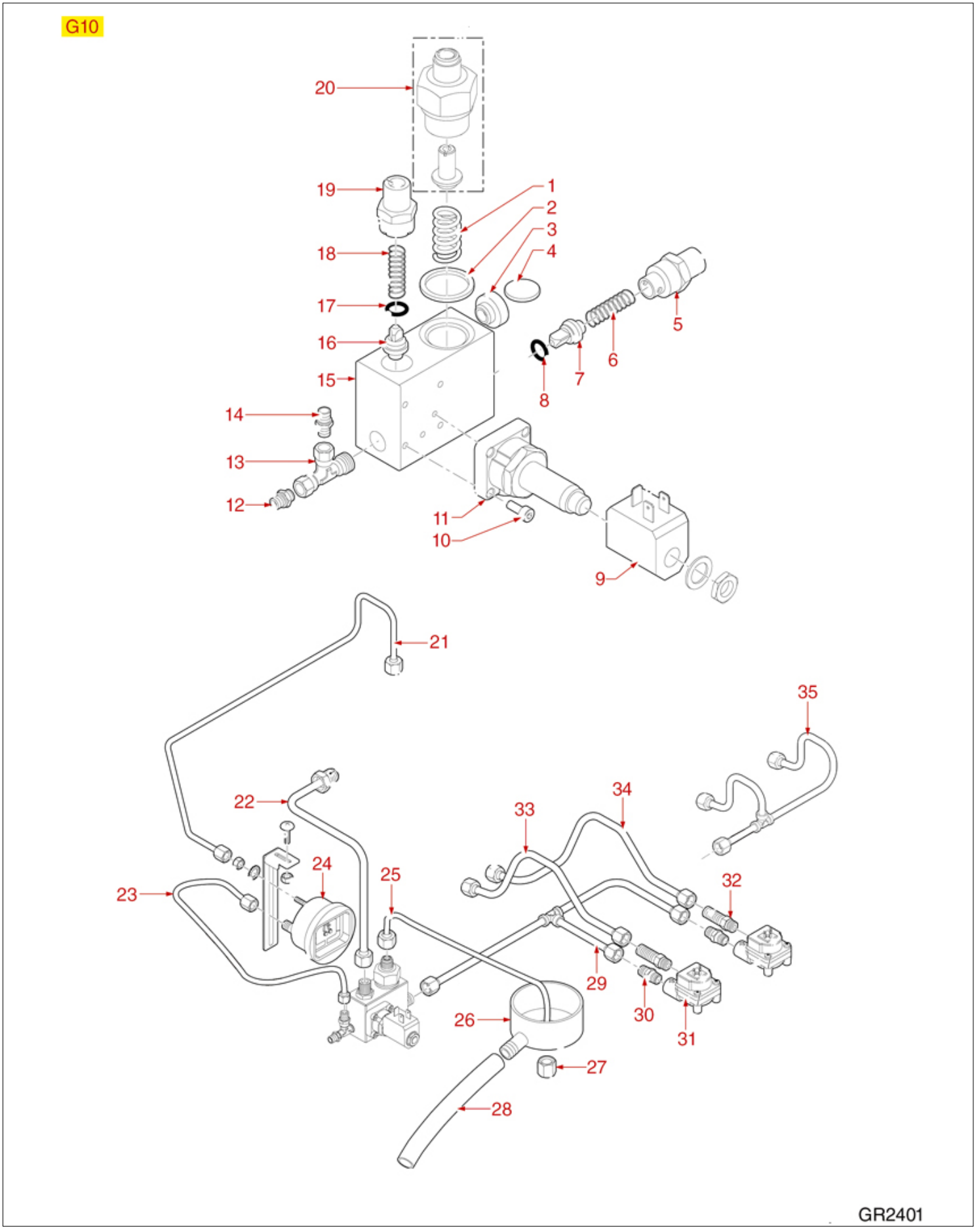

Positions without LF code no.: upon request

GRIMAC

Position	LF code no.	Description
1	1250656	OUTLET SPRING ø 14.5x35 mm
2	1186326	PTFE FLAT GASKET ø 22x16x2 mm
4	1186129	FLAT EPDM GASKET ø 15/6x10 mm
6	1250071	NON-RETURN VALVE SPRING ø 8x32 mm
7	1523201	TRIANGULAR NON-RETURN VALVE
8	1186687	O-RING M 0080-20 VITON
9	3120032	COIL PARKER ZB09 9W 220/240V 50/60Hz
10	1455034	CYLINDER HEAD SCREW M4x10
13	3349355	NICHEL-PL.T-FITTING ø 1/8"F-1/8"F-1/8"F
17	1186687	O-RING M 0080-20 VITON
18	1250071	NON-RETURN VALVE SPRING ø 8x32 mm
24	1245201	BOILER-PUMP PRESSURE GAUGE ø 63 mm
27	3060069	HEXAGONAL NUT M8 MEDIUM
31	1455067	VOLUMETRIC FLOWMETER GICAR

G11 WATER INLET TAP

G11

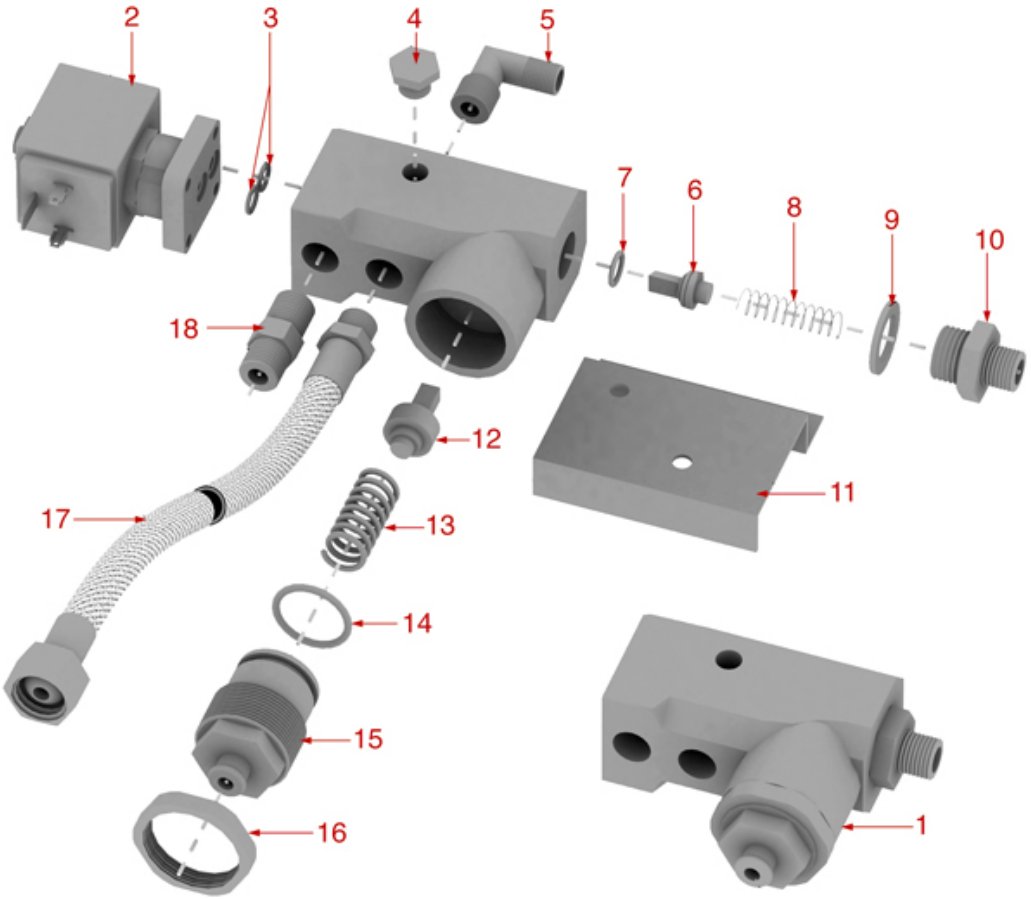

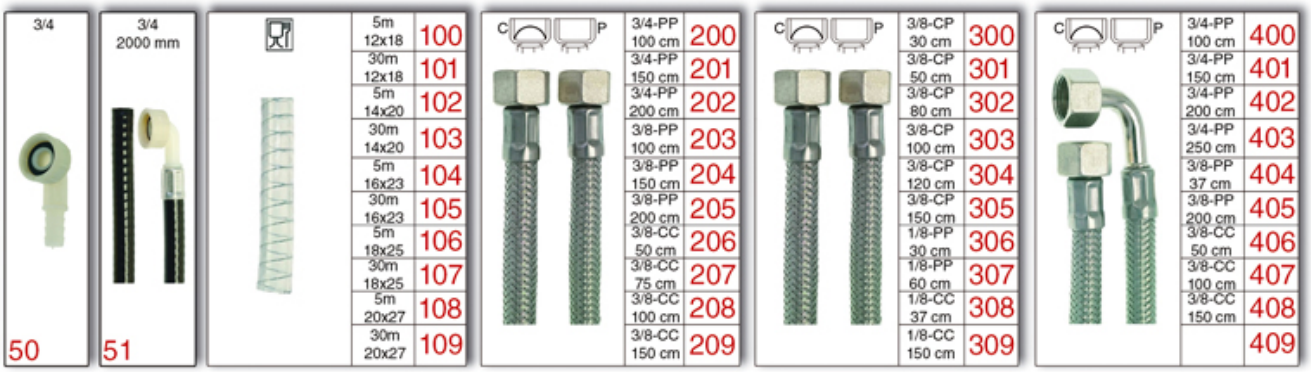

GR2501

Positions without LF code no.: upon request

GRIMAC

Position	LF code no.	Description
1	1358001	WATER INLET TAP
2	1120331	2-WAY SOLENOID VALVE LUCIFER 240V 50Hz
3	1186612	O-RING 02025 VITON
5	1349079	L- FITTING ø 1/4"M 1/8"M
6	1523437	NON-RETURN VALVE
9	1186326	PTFE FLAT GASKET ø 22x16x2 mm
12	1523412	INLET VALVE
18	1349102	FITTING ø 1/4"M-1/4"M
50	1449104	DRAIN ELBOW 3/4"
51	1449876	DRAIN PIPE ø 3/4"F 1500 mm
100	1449670	DRAIN PIPE ELISPIR ø 12x18 mm - 5 m
101	1449270	DRAIN PIPE ELISPIR ø 12x18 mm - 30 m
102	1449671	DRAIN PIPE ELISPIR ø 14x20 mm - 5 m
103	1449271	DRAIN PIPE ELISPIR ø 14x20 mm - 30 m
104	1449672	DRAIN PIPE ELISPIR ø 16x23 mm - 5 m
105	1449272	DRAIN PIPE ELISPIR ø 16x23 mm - 30 m
106	1449673	DRAIN PIPE ELISPIR ø 18x25 mm - 5 m
107	1449273	DRAIN PIPE ELISPIR ø 18x25 mm - 30 m
108	1449674	DRAIN PIPE ELISPIR ø 20x27 mm - 5 m
109	1449274	DRAIN PIPE ELISPIR ø 20x27 mm - 30 m
200	3449036	FLEX HOSE ø 3/4" Fp x Fp 1000 mm
201	3449032	FLEX HOSE ø 3/4" Fp x Fp 1500 mm
202	3449033	FLEX HOSE ø 3/4" Fp x Fp 2000 mm
203	1449724	FLEX HOSE ø 3/8" Fp x Fp 1000 mm
204	1449726	FLEX HOSE ø 3/8" Fp x Fp 1500 mm
205	1449089	FLEX HOSE ø 3/8" Fp x Fp 2000 mm
206	1449722	FLEX HOSE ø 3/8" Fc x Fc 500 mm
207	1449705	FLEX HOSE ø 3/8" Fc x Fc 750 mm
208	1449723	FLEX HOSE ø 3/8" Fc x Fc 1000 mm
209	1449725	FLEX HOSE ø 3/8" Fc x Fc 1500 mm
300	1449710	FLEX HOSE ø 3/8" Fp x Fc 300 mm
301	1449711	FLEX HOSE ø 3/8" Fp x Fc 500 mm
302	1449712	FLEX HOSE ø 3/8" Fp x Fc 800 mm
303	1449713	FLEX HOSE ø 3/8" Fp x Fc 1000 mm
304	1449714	FLEX HOSE ø 3/8" Fp x Fc 1200 mm
305	1449715	FLEX HOSE ø 3/8" Fp x Fc 1500 mm
306	1449708	FLEX HOSE ø 1/8" Fp x Fp 300 mm
307	1449709	FLEX HOSE ø 1/8" Fp x Fp 600 mm
308	1449706	FLEX HOSE ø 1/8" Fc x Fc 370 mm
309	1449707	FLEX HOSE ø 1/8" Fc x Fc 1500 mm
400	3449037	FLEX HOSE ø 3/4" Fp x CFp 1000 mm
401	3449034	FLEX HOSE ø 3/4" Fp x CFp 1500 mm
402	3449035	FLEX HOSE ø 3/4" Fp x CFp 2000 mm
403	3449038	FLEX HOSE ø 3/4" Fp x CFp 2500 mm
404	1449718	FLEX HOSE ø 3/8" Fp x CFp 370 mm
405	1449703	FLEX HOSE ø 3/8" Fp x CFp 2000 mm
406	1449732	FLEX HOSE ø 3/8" Fc x CFc 500 mm
407	1449734	FLEX HOSE ø 3/8" Fc x CFc 1000 mm
408	1449736	FLEX HOSE ø 3/8" Fc x CFc 1500 mm

ZOLAI-ZOLAII-TEN-TWENTY-ECLISSE LEVEL

ZOLAI

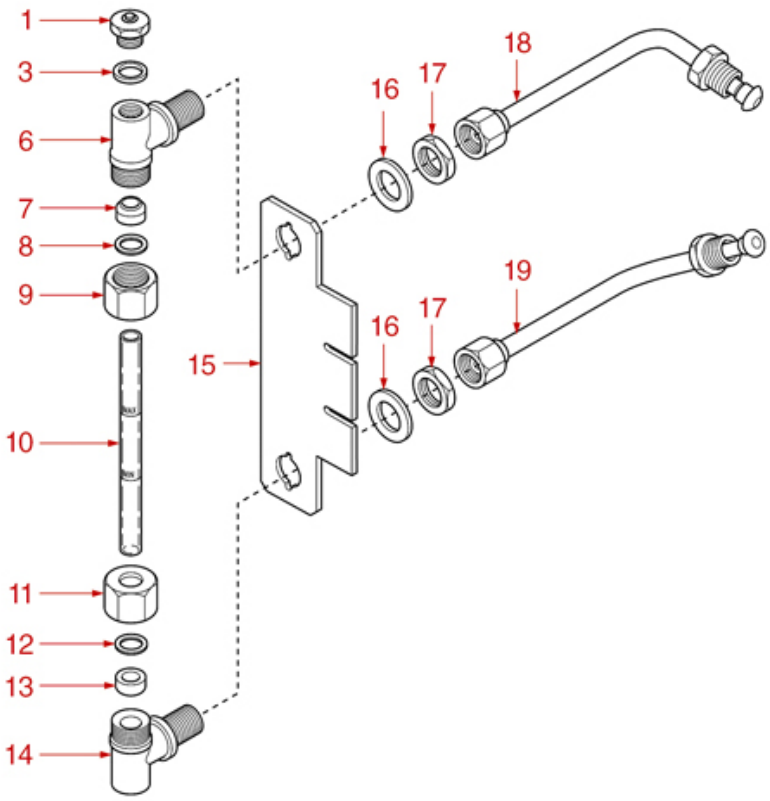

ZOLAII-TEN-TWENTY-ECLISSE

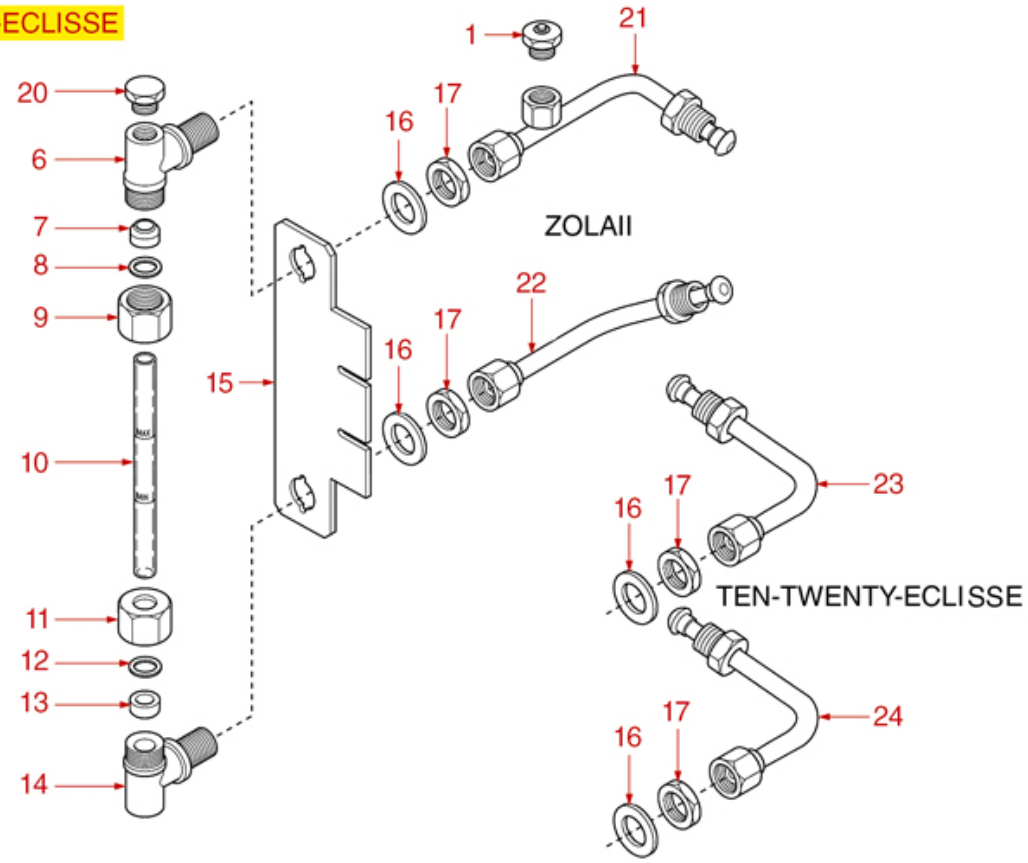

GR3001

Positions without LF code no.: upon request

GRIMAC

Position	LF code no.	Description
1	1523537	BOILER VALVE ø 1/4"M
7	1186206	EPDM FLAT GASKET ø 16x10x8 mm
8	1186685	BRASS WASHER ø 18x11.3x4.5 mm FLAT
10	1520100	LEVEL GAUGE GLASS ø 11x140 mm
12	1186685	BRASS WASHER ø 18x11.3x4.5 mm FLAT
13	1186206	EPDM FLAT GASKET ø 16x10x8 mm

MIA BODY AND ELECTRICAL PARTS

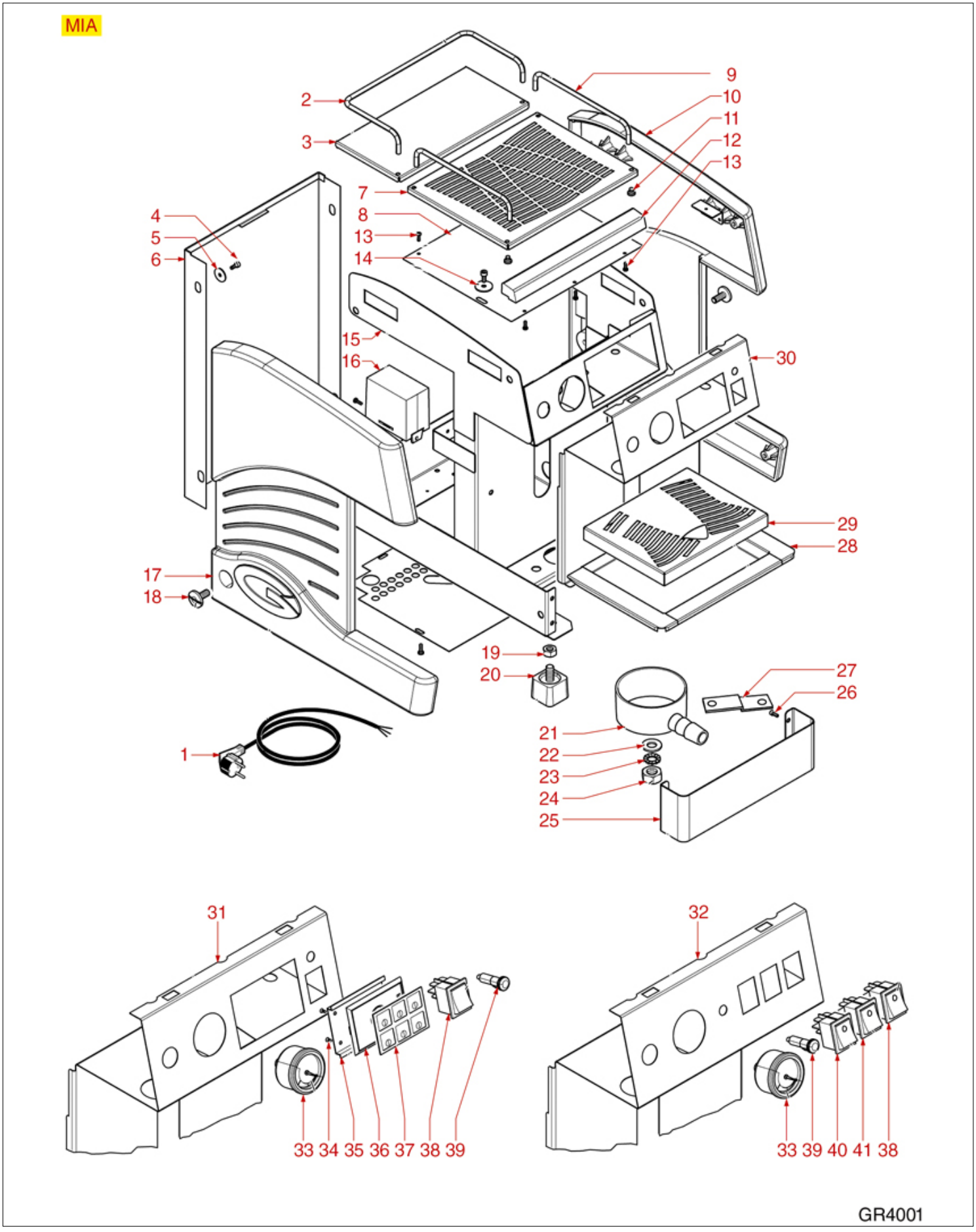

Positions without LF code no.: upon request

Position	LF code no.	Description
5	1455034	CYLINDER HEAD SCREW M4x10
14	1528117	WASHER FLAT LARGE M4
16	1054043	DOSER CONTROL BOX 1 GROUP 230V
16	1341036	LEVEL REGULATOR MFC2SG 220V
33	1245044	BOILER PRESSURE GAUGE ø 41 mm 0÷2,5 bar
38	3319294	BLACK BIPOLAR SWITCH 16A 250V
39	3221080	RED INDICATOR LAMP 230V
40	1319809	BLACK BIPOLAR SWITCH 16A 250V
41	1319806	BLACK BIPOLAR SWITCH 16A 250V

ELECTRICAL PARTS ALL MODELS

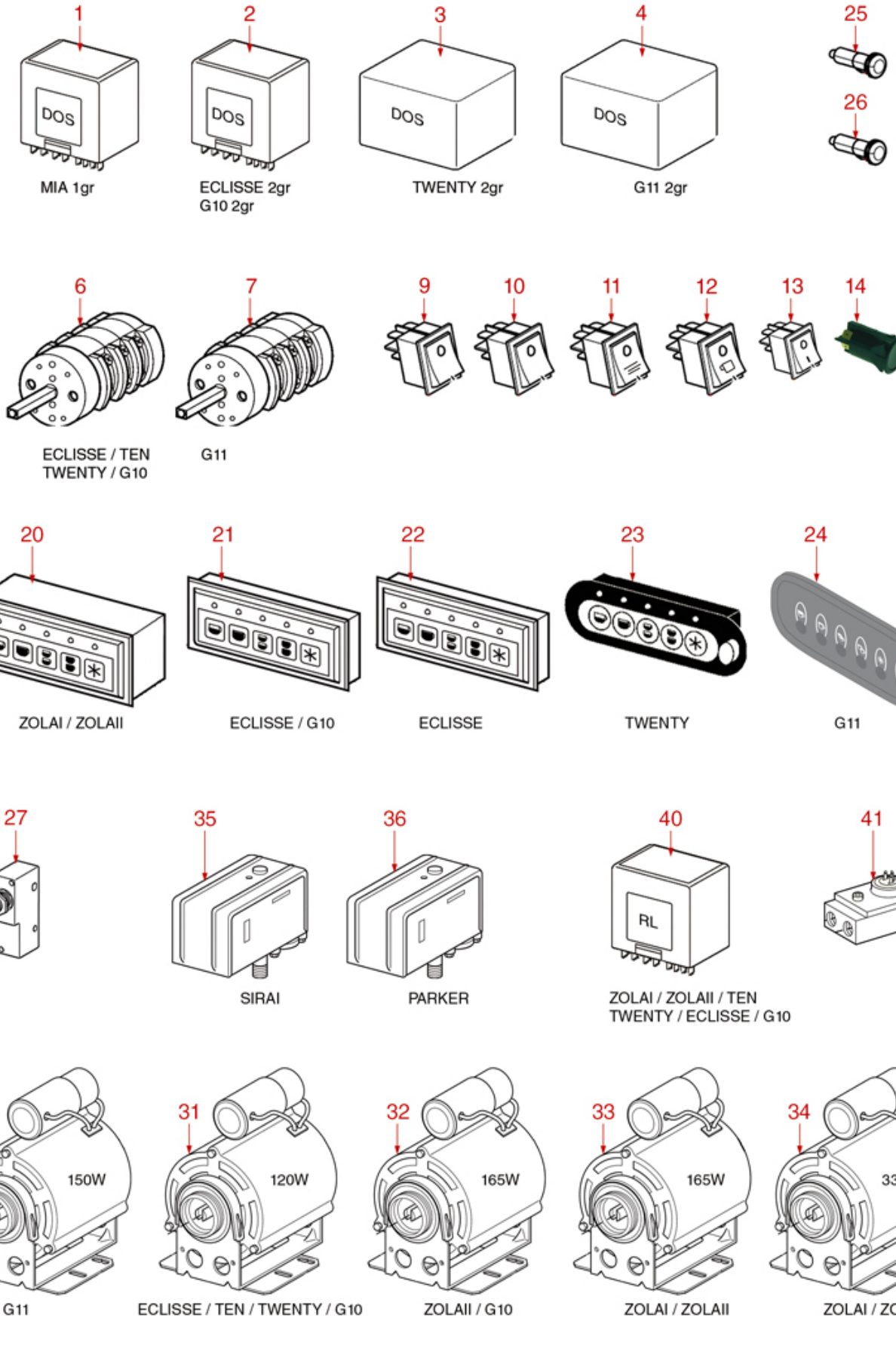

Positions without LF code no.: upon request

GRIMAC

Position	LF code no.	Description
1	1054043	DOSER CONTROL BOX 1 GROUP 230V
2	1054101	DOSER CONTROL BOX 2 GROUPS 230V
3	1054042	DOSER CONTROL BOX 2 GROUPS 240V
4	1054025	DOSER CONTROL BOX 2-3 GROUPS 230V
6	1357200	SELECTOR SWITCH 0-2 POSITIONS 16A 600V
7	1057020	SELECTOR SWITCH 0-2 POSITIONS 25A 600V
9	3319296	BLACK BIPOLAR SWITCH 16A 250V
10	3319294	BLACK BIPOLAR SWITCH 16A 250V
11	1319806	BLACK BIPOLAR SWITCH 16A 250V
12	1319809	BLACK BIPOLAR SWITCH 16A 250V
13	1319392	BLACK BIPOLAR SWITCH 10A 250V
14	1319463	BLACK BIPOLAR PUSH BUTTON 16A 250V
20	1054100	CONTROL-BOX P.BUT.PANEL 5 BUTTONS
21	1319600	PUSH-BUTTON PANEL 5 BUTTONS
22	1319601	PUSH-BUTTON PANEL 5 BUTTONS
23	1319602	PUSH-BUTTON PANEL 6 BUTTONS
24	1319585	PUSH-BUTTON PANEL 6 BUTTONS
25	3221095	ORANGE INDICATOR LAMP 230V
26	3221080	RED INDICATOR LAMP 230V
27	1240841	MICROSWITCH 15A 250V
30	1240072	MOTOR IPC 150W 230V 1.2A 50/60Hz 6 µf
31	1240281	CLAMP RPM MOTOR 120W
32	1240702	MOTOR RPM WITH CLAMP CONNECTION 165W
33	1240703	MOTOR RPM WITH CLAMP CONNECTION 165W
34	1240602	RPM MOTOR WITH CLAMP CONNECTION 330W
35	1320531	PRESSURE SWITCH P302/6 3-POLES 30A
36	1320541	PRESSURE SWITCH PARKER
40	1341316	LEVEL ADJUSTER RLC302CF 230V
41	1455067	VOLUMETRIC FLOWMETER GICAR

MIA BOILER

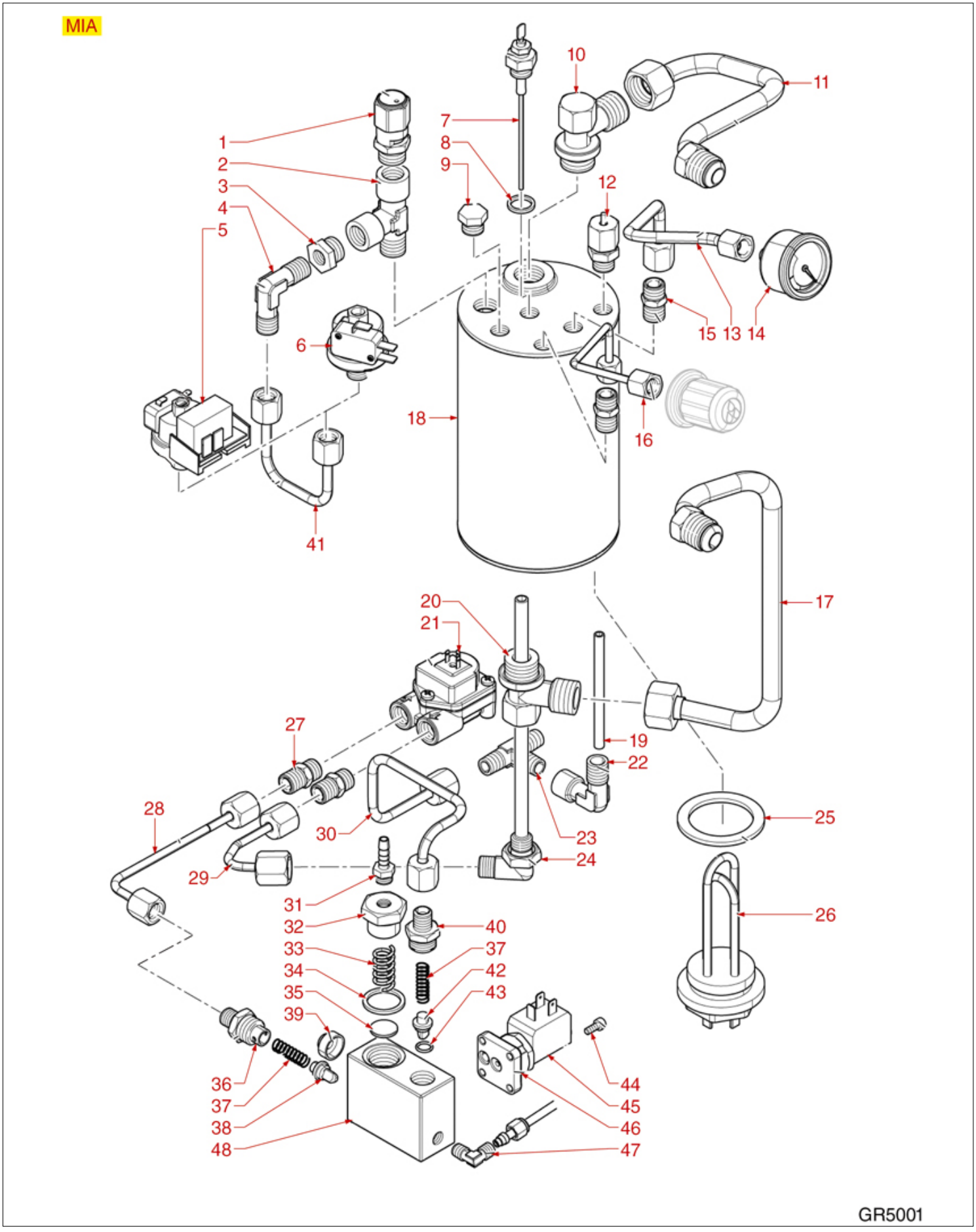

Positions without LF code no.: upon request

GRIMAC

Position	LF code no.	Description
1	1515002	BOILER VALVE ø 3/8"M CE-PED
2	1349708	NICHEL PLATED T-FITTING ø 3/8"F-3/8"F
4	1349710	NICHEL PLATED L-FITTING ø 1/4"M-1/4"M
7	1341750	LEVEL PROBE ø 1/4"M-125 mm
8	1186680	CONICAL PTFE SEAL ø 14.5x9x8 mm
10	1349711	NICHEL PLATED L-FITTING ø 1/2"M-1/2"M
12	1523538	BOILER VALVE ø 1/4"M
14	1245044	BOILER PRESSURE GAUGE ø 41 mm 0÷2,5 bar
20	5500019	BOILER FITTING ø 1/2"M-1/2"M-1/4"F
21	1455067	VOLUMETRIC FLOWMETER GICAR
22	1349717	NICHEL PLATED L-FITTING ø 1/4"M-1/4"F
23	3349356	NICHEL-PL.T-FITTING ø 1/8"M-1/8"M-1/8"M
25	1186623	PTFE FLAT GASKET ø 53x43x3 mm
25	1186633	FLAT CARBO GASKET ø 53x42x3 mm
25	3186010	ASBESTOS FREE FLAT GASKET ø 54x42x2 mm
26	1755603	HEATING ELEMENT 1300W 230V
31	1349653	HOSE-END FITTING ø 1/8"M ø 6 NICKEL
33	1250656	OUTLET SPRING ø 14.5x35 mm
34	1186326	PTFE FLAT GASKET ø 22x16x2 mm
35	1186129	FLAT EPDM GASKET ø 15/6x10 mm
37	1250071	NON-RETURN VALVE SPRING ø 8x32 mm
38	1523201	TRIANGULAR NON-RETURN VALVE
43	1186687	O-RING M 0080-20 VITON
44	1455034	CYLINDER HEAD SCREW M4x10
45	1120336	COIL PARKER ZB09 9W 110/120V 50/60Hz
45	3120032	COIL PARKER ZB09 9W 220/240V 50/60Hz
47	1349250	"L"COUPLING 1/8"M-1/8"M ø 6 mm

ZOLAI-ZOLAII BOILER

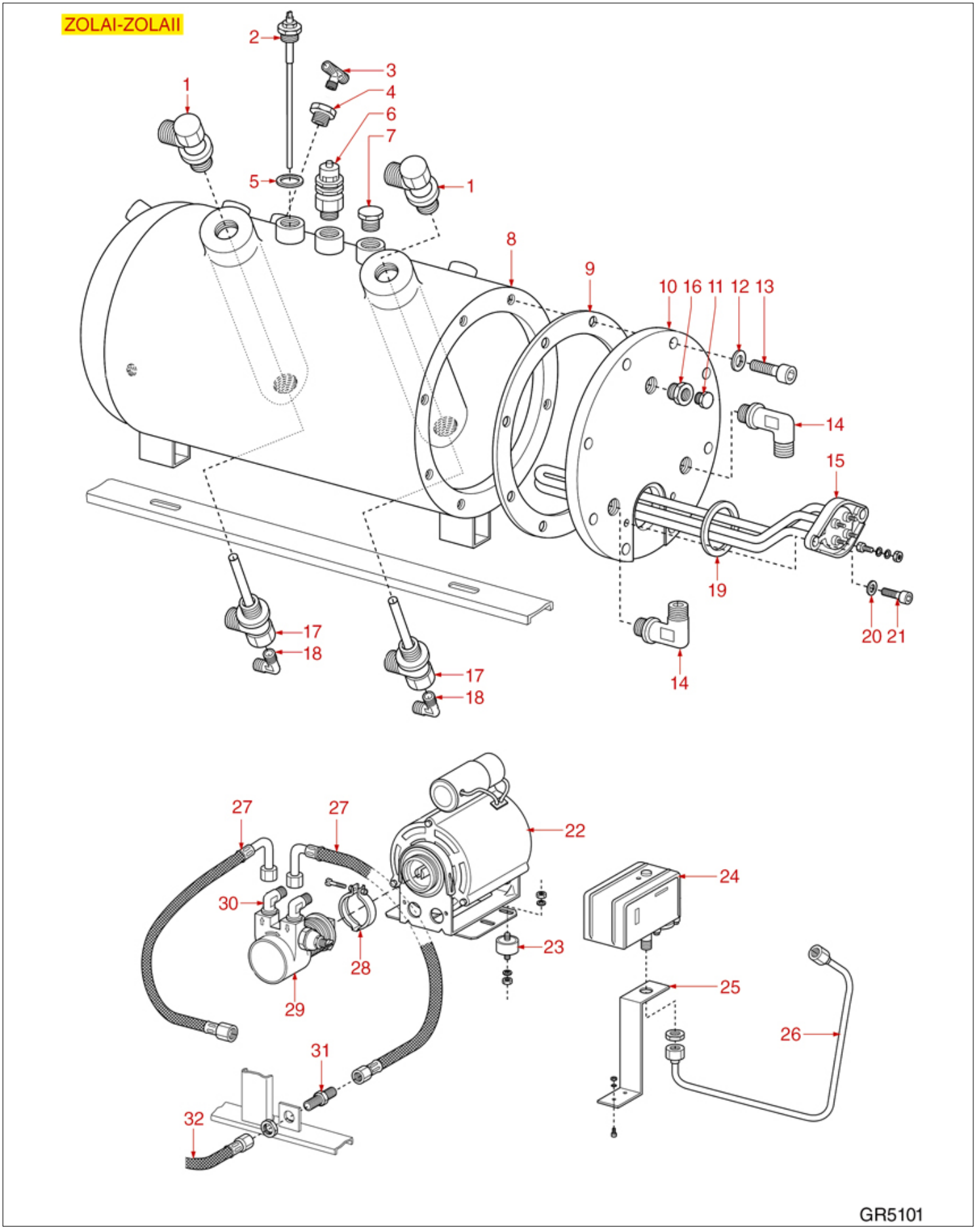

Positions without LF code no.: upon request

GRIMAC

Position	LF code no.	Description
	1186690	BOILER GASKET ø 210x170x3 mm
1	1349014	BOILER FITTING ø 1/2"M-1/2"M
2	1341751	LEVEL PROBE ø 1/4"M-150 mm
3	3349356	NICHEL-PL.T-FITTING ø 1/8"M-1/8"M-1/8"M
6	1515100	BOILER VALVE ø 3/8"M 1.8bar CE-PED
9	1186690	BOILER GASKET ø 210x170x3 mm
15	1755400	HEATING ELEMENT 3200W 230V
15	1755401	HEATING ELEMENT 4500W 230V
15	1755402	HEATING ELEMENT 6000W 230V
17	1349278	BOILER FITTING ø 1/2"M-1/2"M-1/4"F
18	1449696	INJECTION PIPE ø 1/4"M
19	1186179	PTFE FLAT GASKET ø 57x43x3 mm
22	1240702	MOTOR RPM WITH CLAMP CONNECTION 165W
24	1320531	PRESSURE SWITCH P302/6 3-POLES 30A
24	1320541	PRESSURE SWITCH PARKER
27	1449705	FLEX HOSE ø 3/8" Fc x Fc 750 mm
28	1168011	STAINLESS STEEL CLAMP FOR FLANGE PUMP
29	1330001	ROTARY VANE PUMP ROTOFLOW ø 3/8" NPT
30	1349706	L-FITTING ø 3/8"M-3/8"M NICKEL-PLATED
31	1349705	COUPLING ø 3/8"M-3/8"M LOAD EXTENSION
32	1449725	FLEX HOSE ø 3/8" Fc x Fc 1500 mm

TEN-TWENTY BOILER

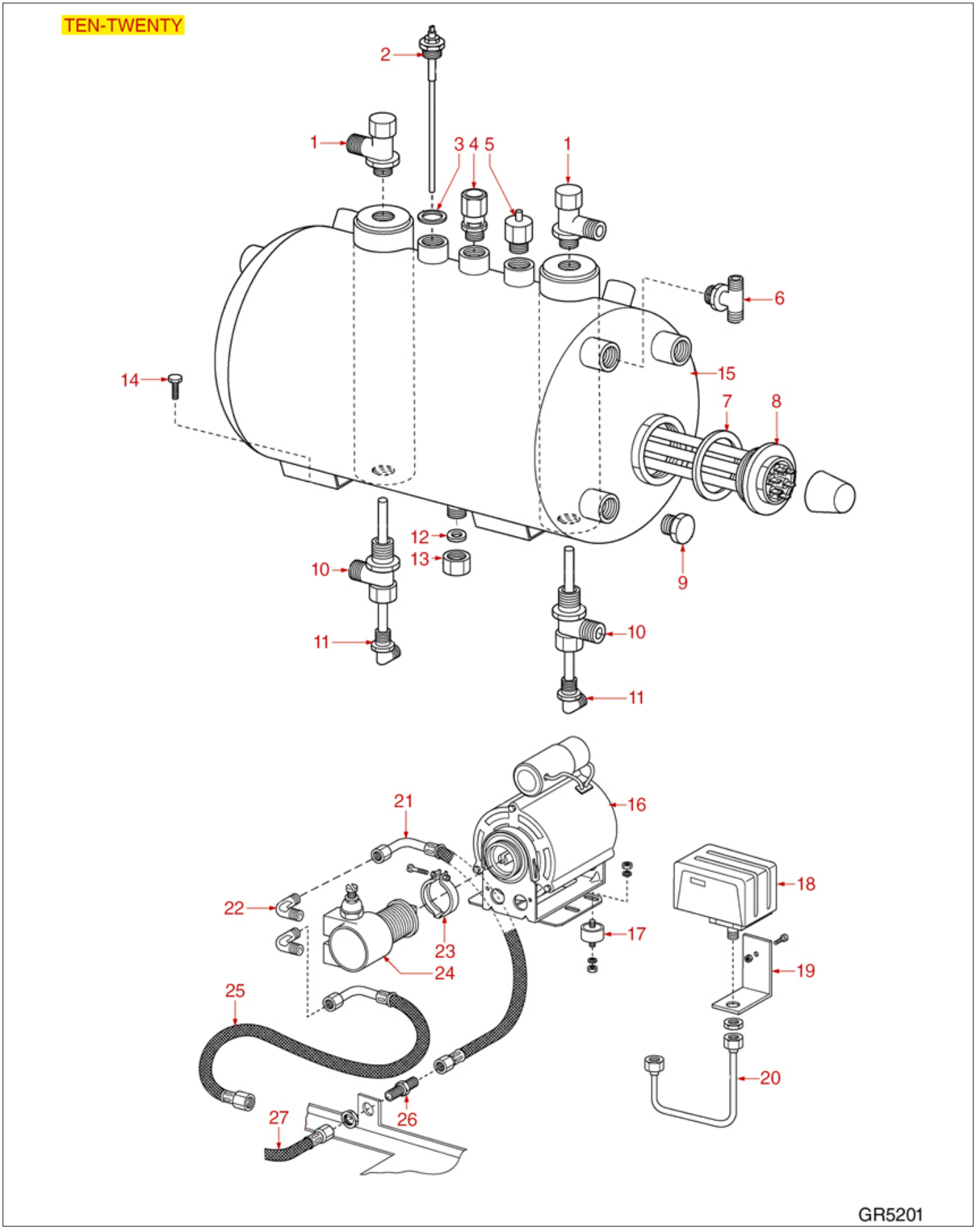

Positions without LF code no.: upon request

GRIMAC

Position	LF code no.	Description
1	1349014	BOILER FITTING ø 1/2"M-1/2"M
2	1341750	LEVEL PROBE ø 1/4"M-125 mm
2	1341751	LEVEL PROBE ø 1/4"M-150 mm
4	1515002	BOILER VALVE ø 3/8"M CE-PED
5	1523538	BOILER VALVE ø 1/4"M
7	1186623	PTFE FLAT GASKET ø 53x43x3 mm
8	1755403	HEATING ELEMENT 3300W 230V
8	1755404	HEATING ELEMENT 4500W 230V
10	1349278	BOILER FITTING ø 1/2"M-1/2"M-1/4"F
16	1240281	CLAMP RPM MOTOR 120W
18	1320531	PRESSURE SWITCH P302/6 3-POLES 30A
18	1320541	PRESSURE SWITCH PARKER
22	1349706	L-FITTING ø 3/8"M-3/8"M NICKEL-PLATED
23	1168011	STAINLESS STEEL CLAMP FOR FLANGE PUMP
24	1330001	ROTARY VANE PUMP ROTOFLOW ø 3/8" NPT
26	1349705	COUPLING ø 3/8"M-3/8"M LOAD EXTENSION
27	1449725	FLEX HOSE ø 3/8" Fc x Fc 1500 mm

ECLISSE BOILER

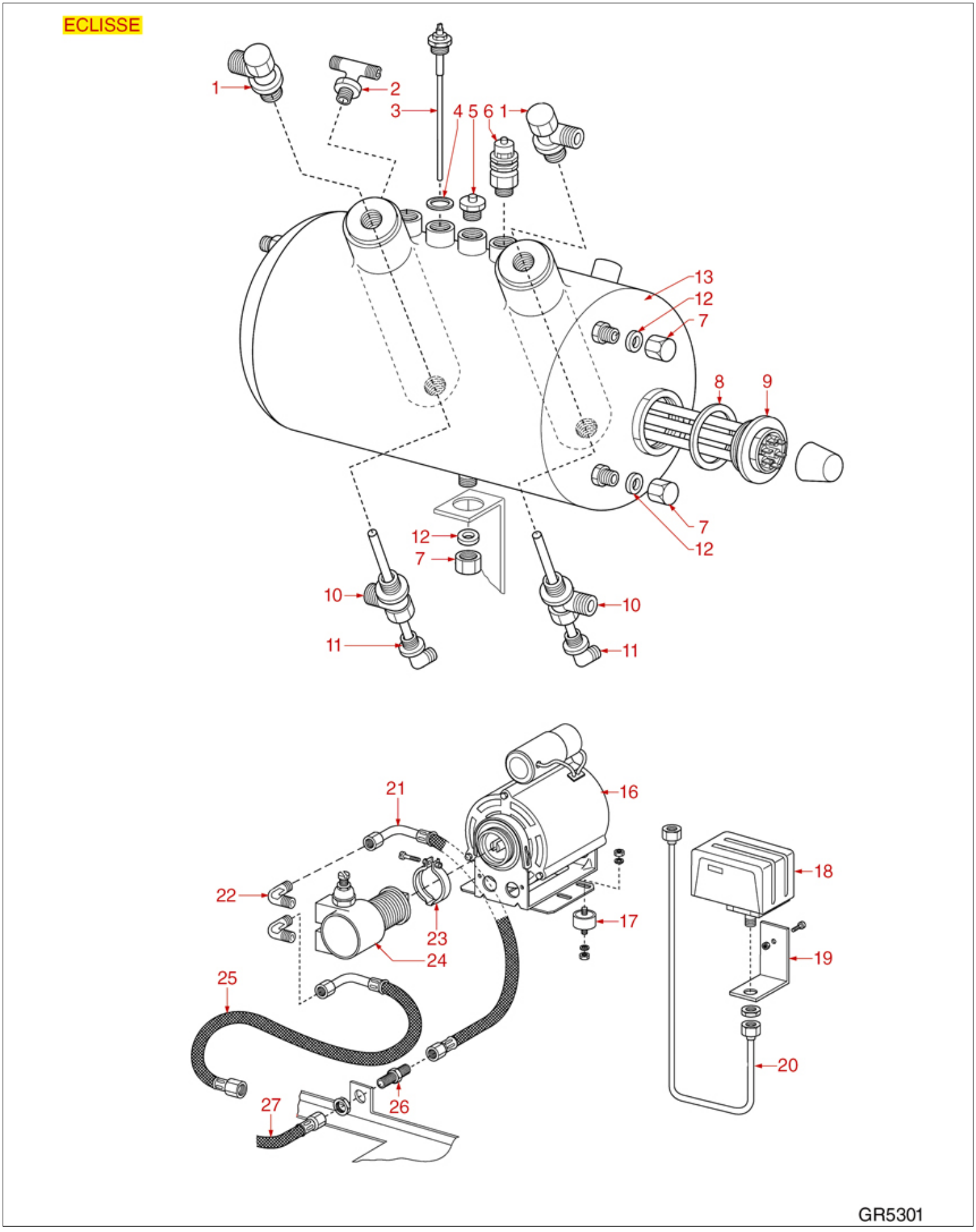

Positions without LF code no.: upon request

GRIMAC

Position	LF code no.	Description
1	1349014	BOILER FITTING ø 1/2"M-1/2"M
3	1341750	LEVEL PROBE ø 1/4"M-125 mm
5	1523537	BOILER VALVE ø 1/4"M
6	1515002	BOILER VALVE ø 3/8"M CE-PED
8	1186623	PTFE FLAT GASKET ø 53x43x3 mm
9	1755403	HEATING ELEMENT 3300W 230V
10	1349278	BOILER FITTING ø 1/2"M-1/2"M-1/4"F
11	1449123	INJECTION PIPE ø 1/4"M
16	1240281	CLAMP RPM MOTOR 120W
18	1320531	PRESSURE SWITCH P302/6 3-POLES 30A
18	1320541	PRESSURE SWITCH PARKER
22	1349706	L-FITTING ø 3/8"M-3/8"M NICKEL-PLATED
23	1168011	STAINLESS STEEL CLAMP FOR FLANGE PUMP
24	1330025	ROTARY VANE PUMP ROTOFLOW ø 3/8" GAS
26	1349705	COUPLING ø 3/8"M-3/8"M LOAD EXTENSION
27	1449725	FLEX HOSE ø 3/8" Fc x Fc 1500 mm

G10 BOILER

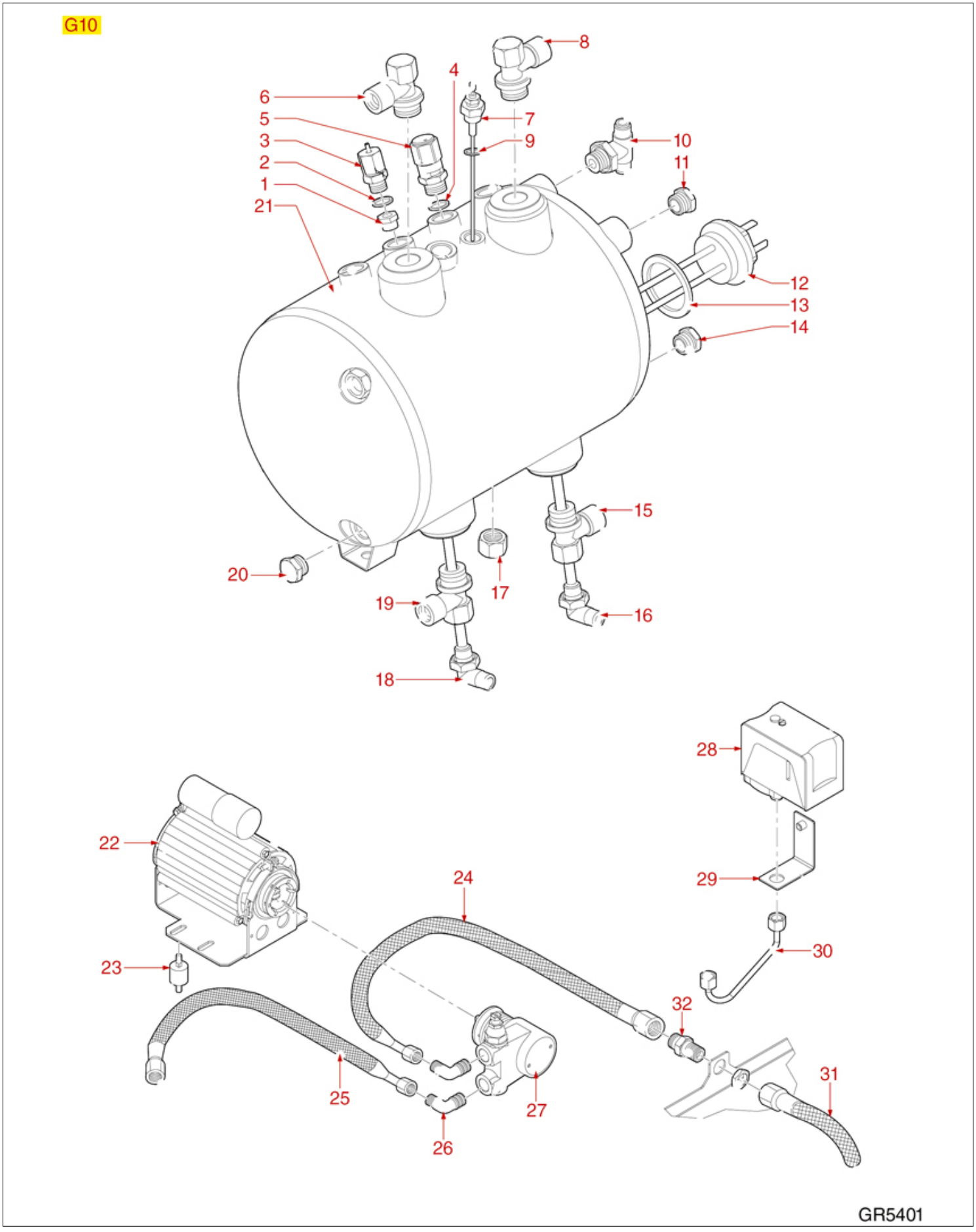

Positions without LF code no.: upon request

GRIMAC

Position	LF code no.	Description
2	1186982	FLAT PTFE GASKET ø 17x13x2 mm
3	1523538	BOILER VALVE ø 1/4"M
4	1186326	PTFE FLAT GASKET ø 22x16x2 mm
5	1515002	BOILER VALVE ø 3/8"M CE-PED
7	1341752	LEVEL PROBE ø 1/4"M-148 mm
9	1186982	FLAT PTFE GASKET ø 17x13x2 mm
12	1755403	HEATING ELEMENT 3300W 230V
12	1755404	HEATING ELEMENT 4500W 230V
13	1186623	PTFE FLAT GASKET ø 53x43x3 mm
13	1186633	FLAT CARBO GASKET ø 53x42x3 mm
22	1240281	CLAMP RPM MOTOR 120W
22	1240702	MOTOR RPM WITH CLAMP CONNECTION 165W
24	1449705	FLEX HOSE ø 3/8" Fc x Fc 750 mm
25	1449705	FLEX HOSE ø 3/8" Fc x Fc 750 mm
26	1349706	L-FITTING ø 3/8"M-3/8"M NICKEL-PLATED
27	1330001	ROTARY VANE PUMP ROTOFLOW ø 3/8" NPT
28	1320531	PRESSURE SWITCH P302/6 3-POLES 30A
28	1320541	PRESSURE SWITCH PARKER
31	1449715	FLEX HOSE ø 3/8" Fp x Fc 1500 mm
32	1349705	COUPLING ø 3/8"M-3/8"M LOAD EXTENSION

G11 BOILER

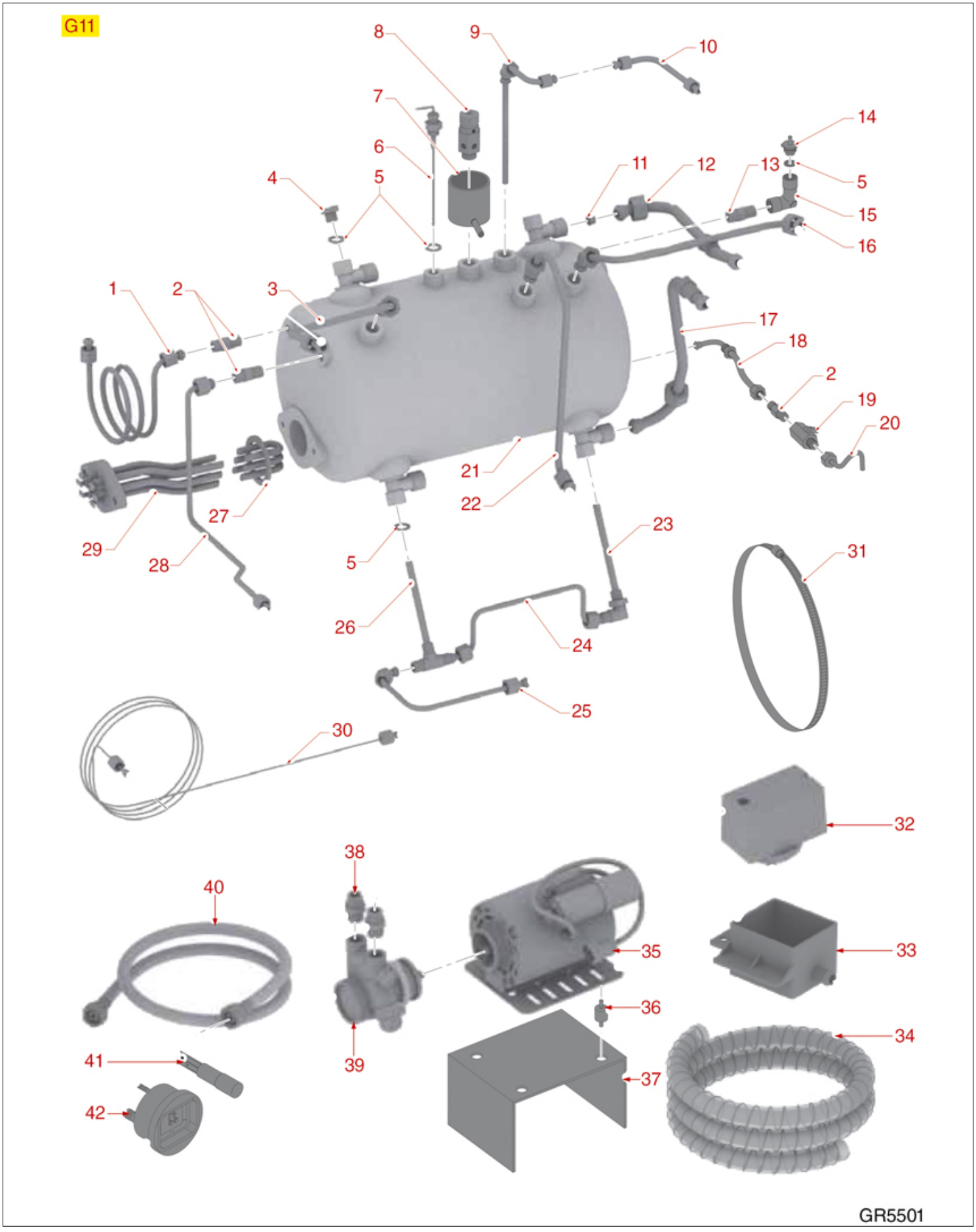

Positions without LF code no.: upon request

GRIMAC

Position	LF code no.	Description
2	1349102	FITTING ø 1/4"M-1/4"M
5	1186404	PTFE FLAT GASKET ø 18x13x2 mm
6	1341752	LEVEL PROBE ø 1/4"M-148 mm
8	1515100	BOILER VALVE ø 3/8"M 1.8bar CE-PED
13	1349112	FITTING ø 1/4"M-3/8"M
14	1523534	BOILER VALVE ø 1/4"M
19	3526699	BALL VALVE ø 1/4" MF
23	1449123	INJECTION PIPE ø 1/4"M
27	1186606	FLAT CARBO GASKET ø 57x43x3 mm
29	1755011	HEATING ELEMENT 3500W 230V
29	1755012	HEATING ELEMENT 4000W 230V
32	1320531	PRESSURE SWITCH P302/6 3-POLES 30A
33	1527511	DRAIN TUB
34	1449672	DRAIN PIPE ELISPIR ø 16x23 mm - 5 m
35	1240072	MOTOR IPC 150W 230V 1.2A 50/60Hz 6 µf
38	1349100	PUMP CONNECTION ø 3/8"CONIC-3/8" STRAIGH
39	1330004	ROTARY VANE PUMP ROTOFLOW ø 3/8" NPT
40	1449089	FLEX HOSE ø 3/8" Fp x Fp 2000 mm
41	3221095	ORANGE INDICATOR LAMP 230V
42	1245201	BOILER-PUMP PRESSURE GAUGE ø 63 mm

ZOLAI BODY PARTS

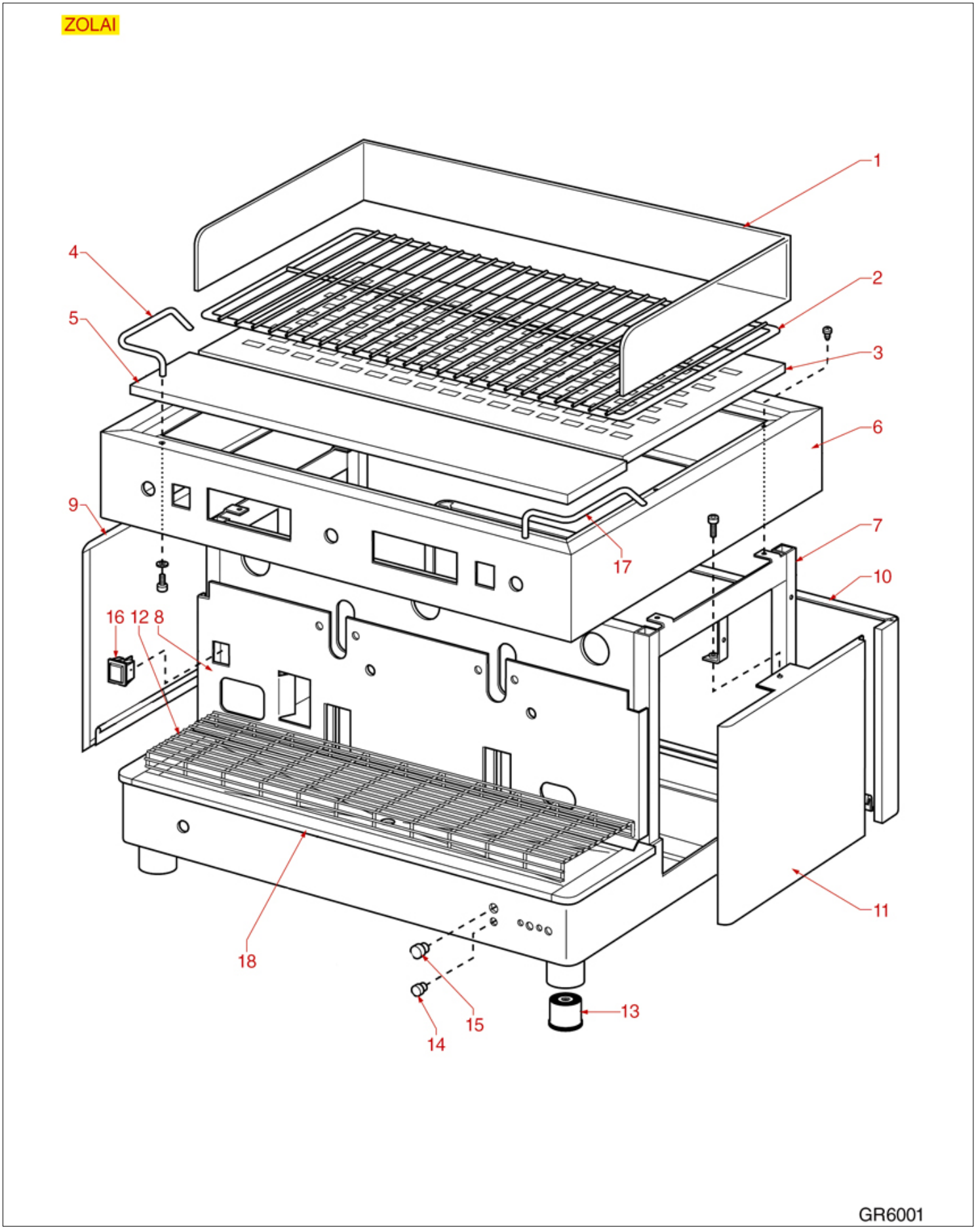

Positions without LF code no.: upon request

GRIMAC

Position	LF code no.	Description
12	1185024	STAIN.STEEL CUP SUPPORT GRID 622x150 mm
12	1185025	STAIN.STEEL CUP SUPPORT GRID 788x150 mm

ZOLAII BODY PARTS

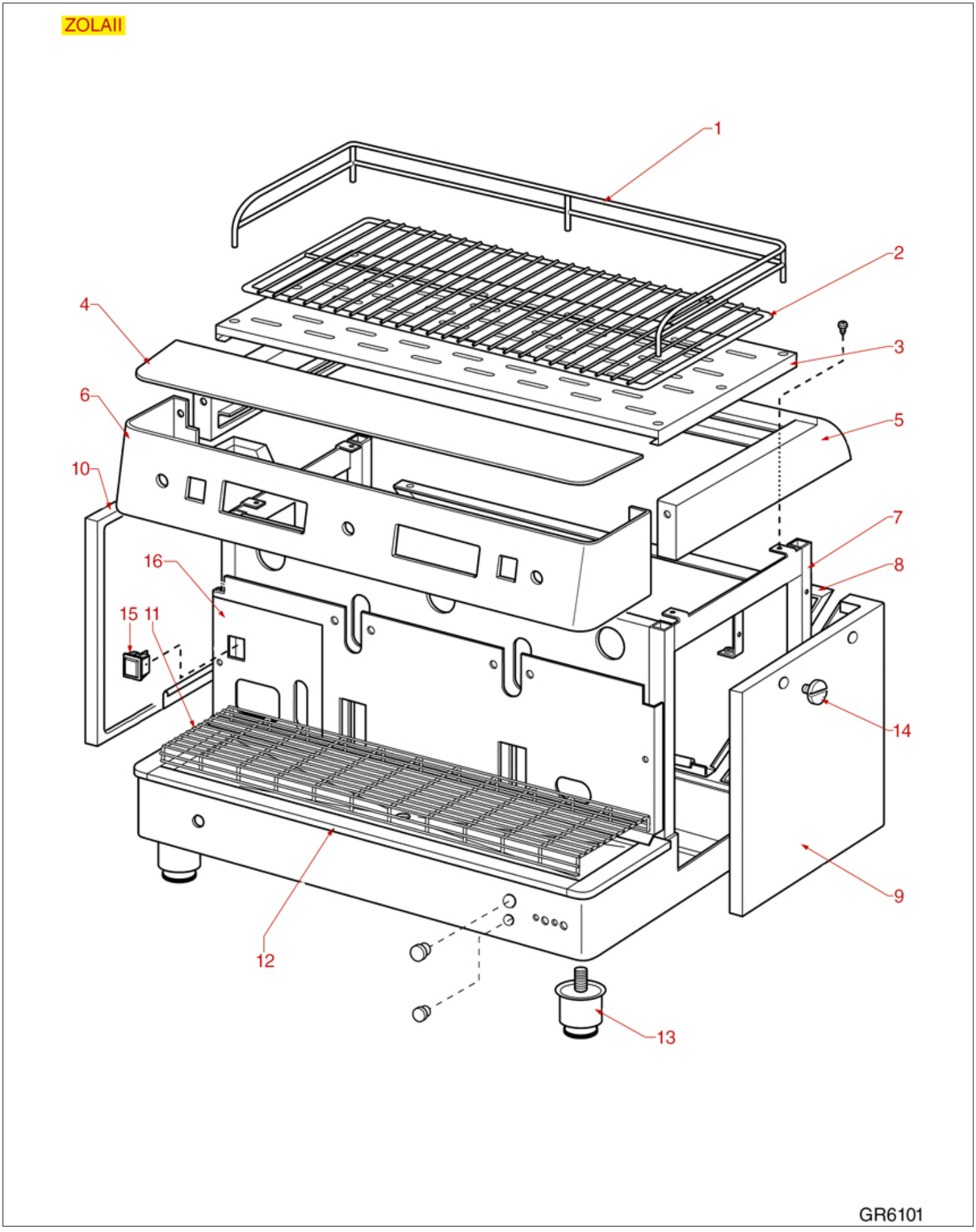

Positions without LF code no.: upon request

GRIMAC

Position	LF code no.	Description
11	1185024	STAIN.STEEL CUP SUPPORT GRID 622x150 mm
11	1185025	STAIN.STEEL CUP SUPPORT GRID 788x150 mm

TEN BODY PARTS

TEN

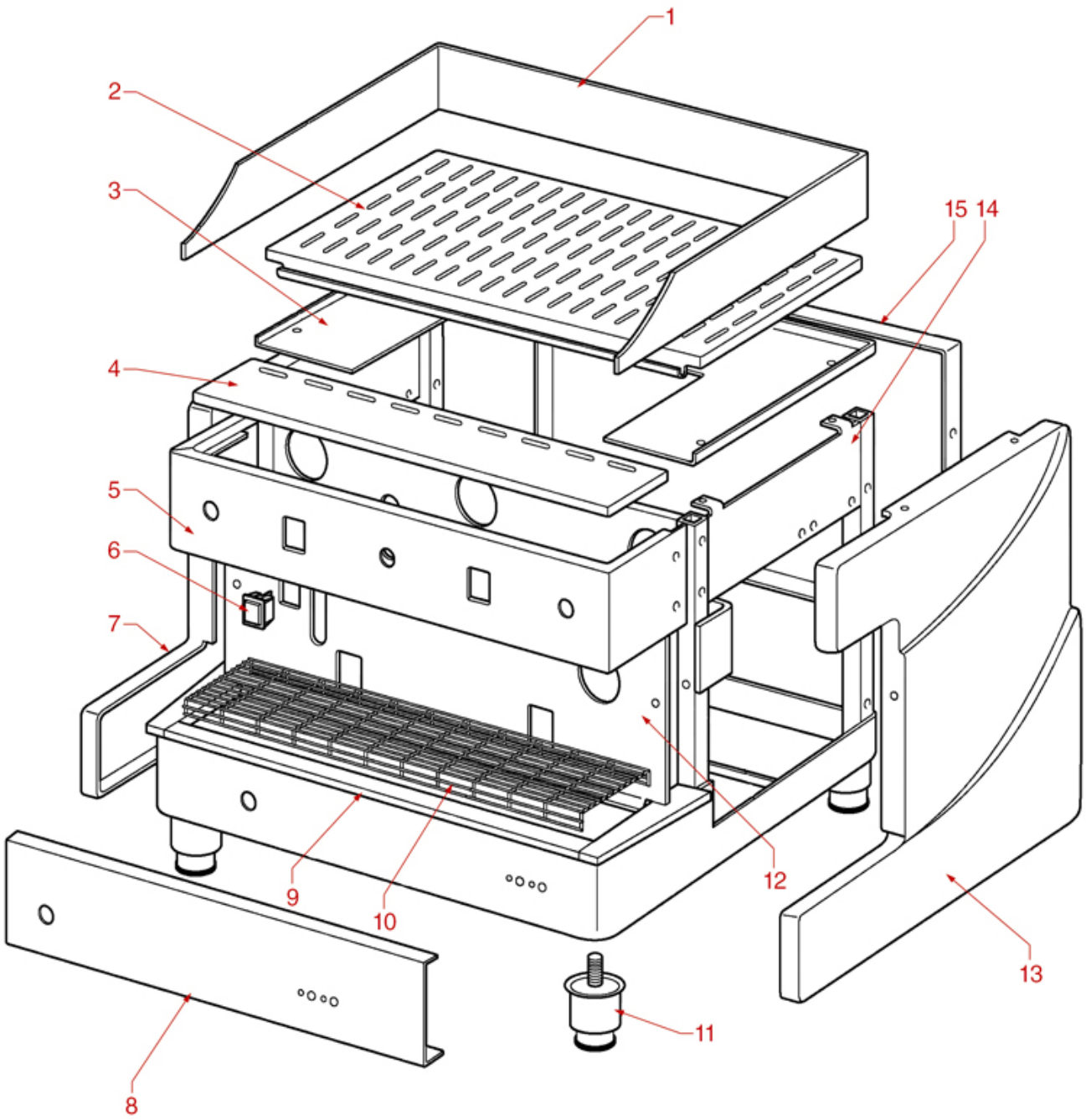

Positions without LF code no.: upon request

GRIMAC

Position	LF code no.	Description
6	3319294	BLACK BIPOLAR SWITCH 16A 250V
10	1185027	STAIN.STEEL CUP SUPPORT GRID 588x160 mm
10	1185028	STAIN.STEEL CUP SUPPORT GRID 767x160 mm

TWENTY BODY PARTS

TWENTY

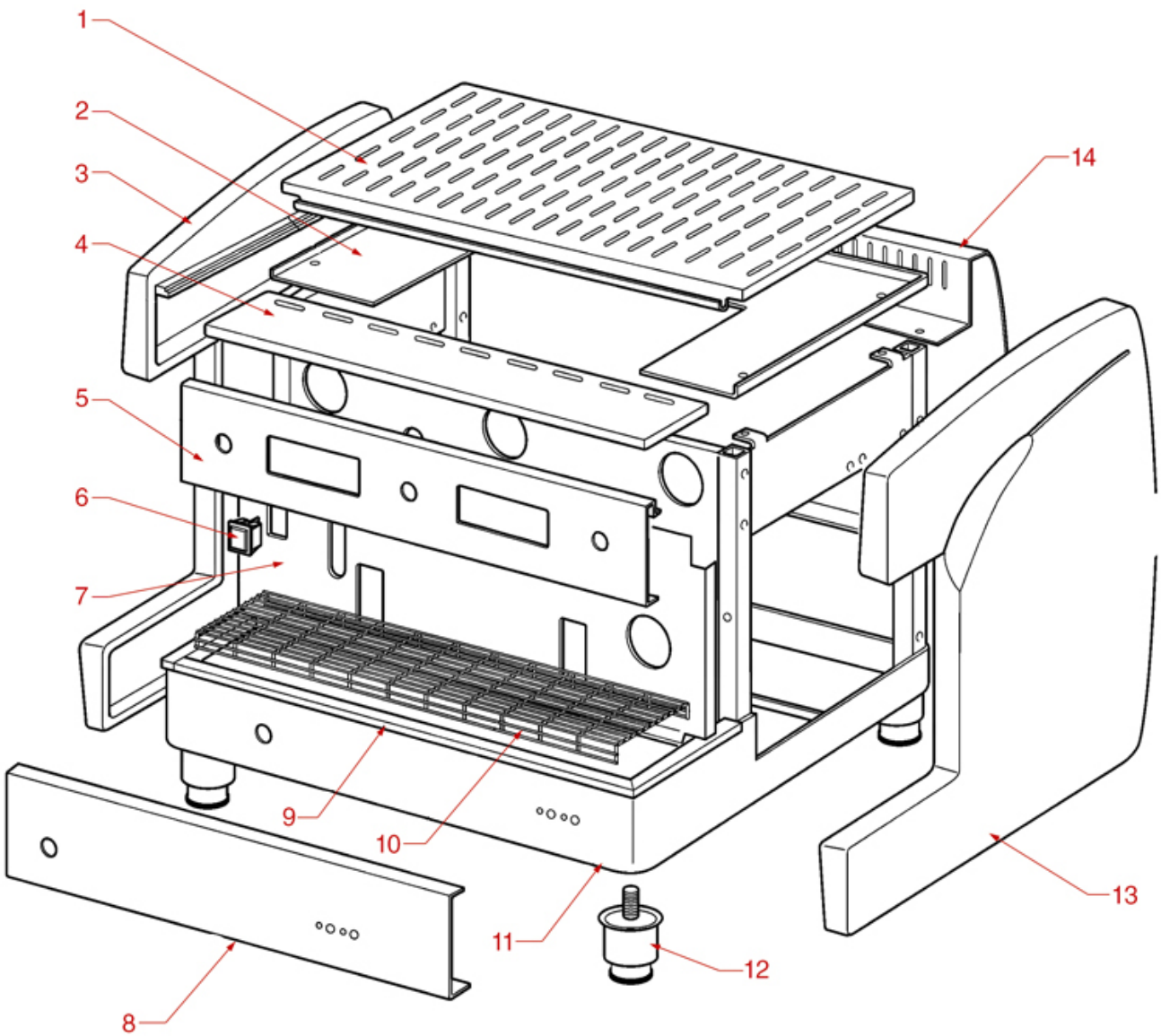

Positions without LF code no.: upon request

GRIMAC

Position	LF code no.	Description
6	3319294	BLACK BIPOLAR SWITCH 16A 250V
10	1185027	STAIN.STEEL CUP SUPPORT GRID 588x160 mm
10	1185028	STAIN.STEEL CUP SUPPORT GRID 767x160 mm

ECLISSE BODY PARTS

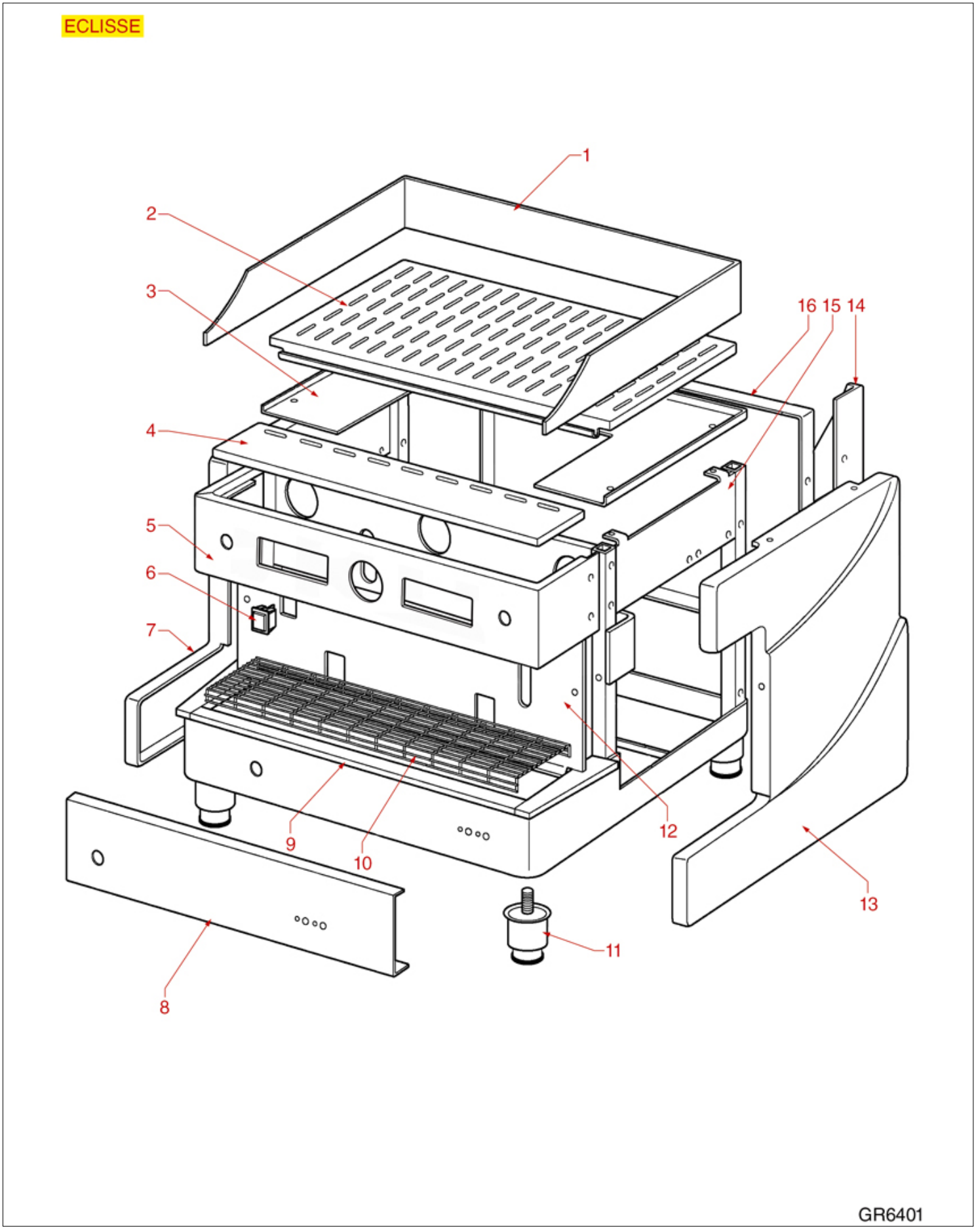

Positions without LF code no.: upon request

GRIMAC

Position	LF code no.	Description
10	1185026	STAIN.STEEL CUP SUPPORT GRID 488x160 mm

G10 BODY PARTS

G10

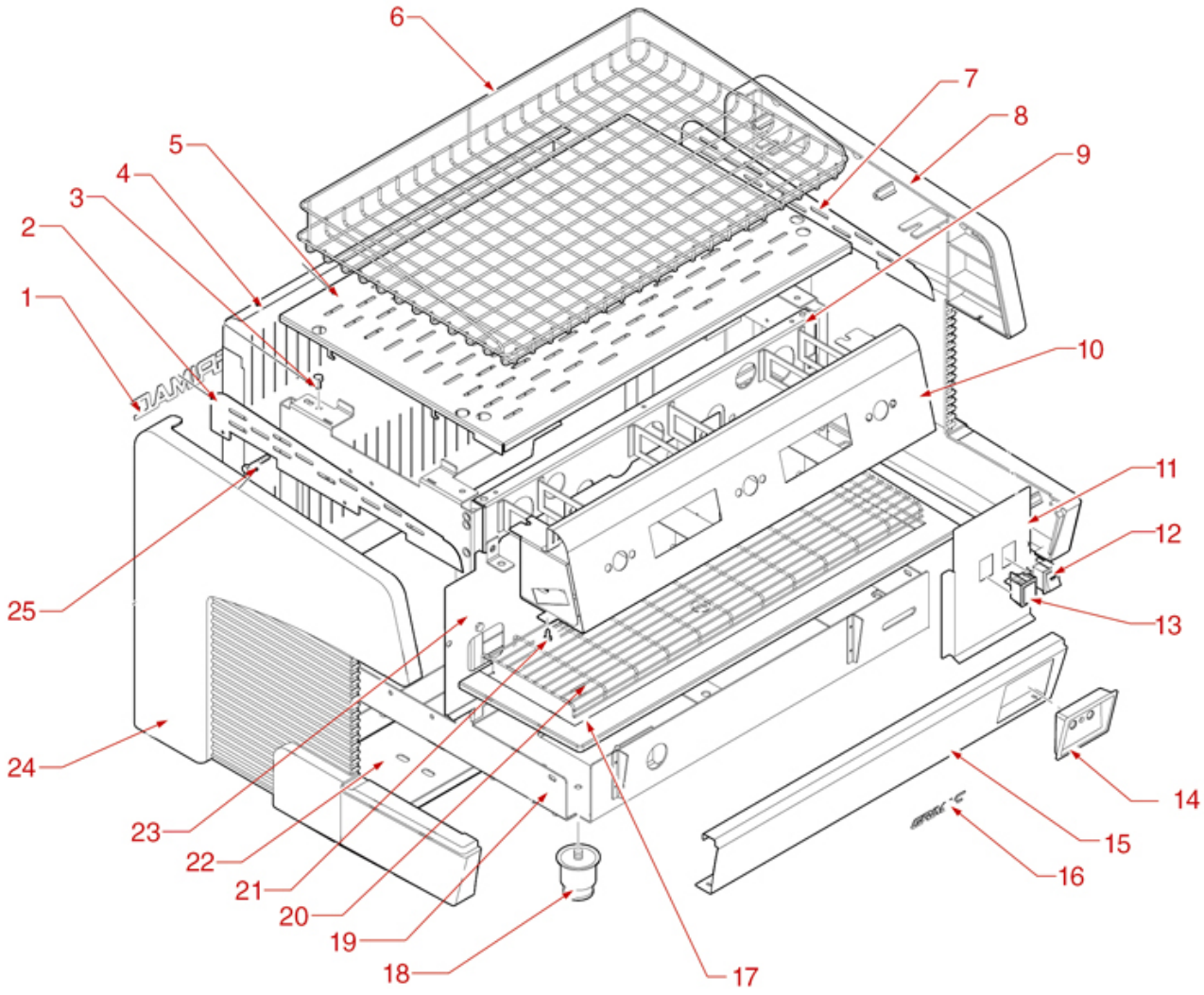

Positions without LF code no.: upon request

GRIMAC

Position	LF code no.	Description
12	1319809	BLACK BIPOLAR SWITCH 16A 250V
20	1185027	STAIN.STEEL CUP SUPPORT GRID 588x160 mm
20	1185028	STAIN.STEEL CUP SUPPORT GRID 767x160 mm

G11 BODY PARTS

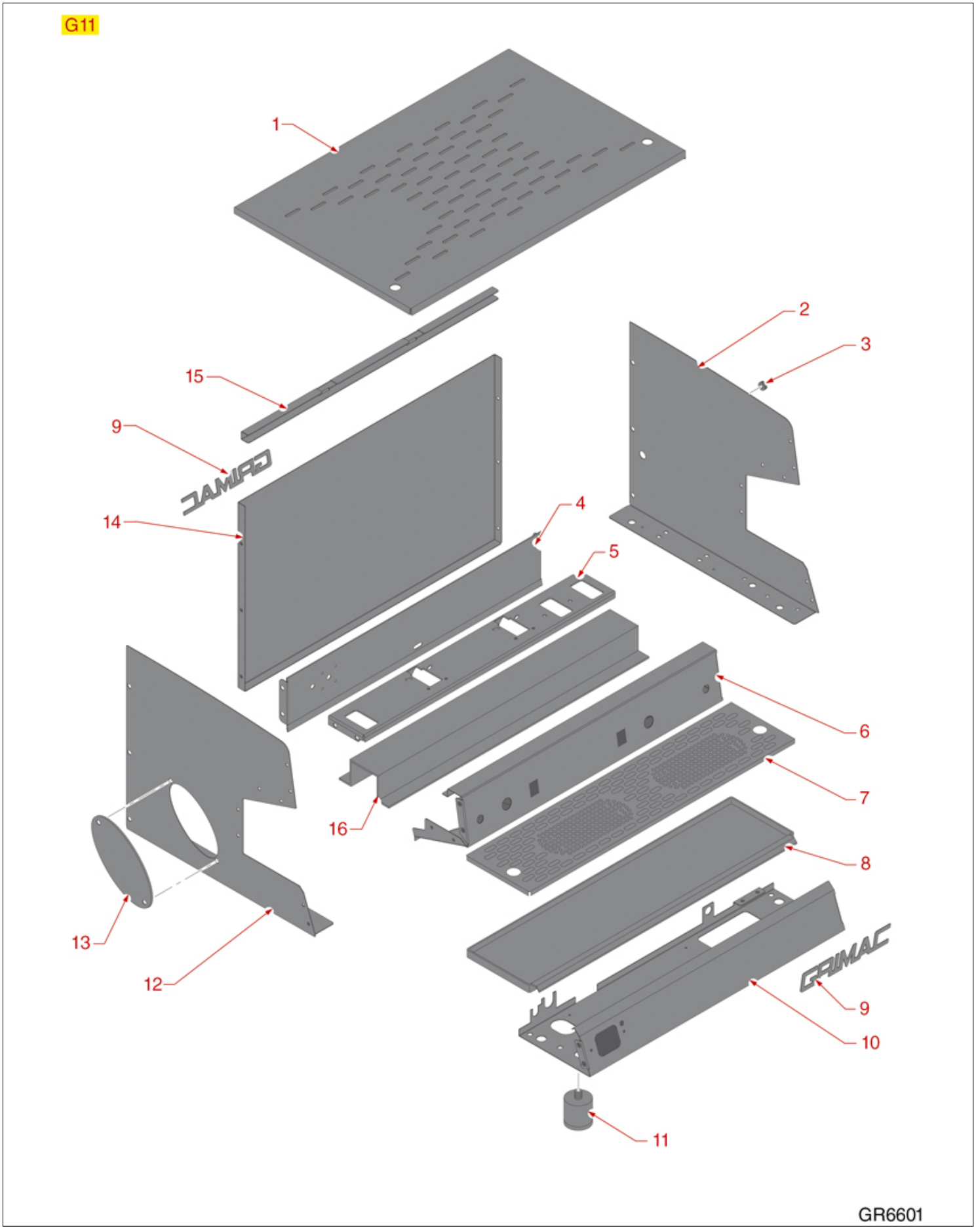

Positions without LF code no.: upon request

GRIMAC

Position	LF code no.	Description
11	1313518	FOOT ø 40x45 mm M10

GRIMAC

Photo	LF Code	Dimensions	Suitable for	Notes
5	1186129	ø 15/6x10 mm - H 10 mm	FUTURMAT 01853704	FOR STEAM/WATER TAPS - PER RUBINETTI VAPORE/ACQUA
5	1186129	ø 15/6x10 mm - H 10 mm	GRIMAC 1110100051/GR758	FOR STEAM/WATER TAPS - PER RUBINETTI VAPORE/ACQUA
5	1186129	ø 15/6x10 mm - H 10 mm	SPAZIALE 00290	FOR STEAM/WATER TAPS - PER RUBINETTI VAPORE/ACQUA
5	1186129	ø 15/6x10 mm - H 10 mm	VIBIEMME GUARVALESPEVR	FOR STEAM/WATER TAPS - PER RUBINETTI VAPORE/ACQUA
6	1786221	---	PARKER	FOR SOLENOID VALVES - PER ELETTROVALVOLE

Photo	LF Code	Dimensions (mm)	Suitable for
1	1520007	ø 9x132	GAGGIA S453101 - PAVONI 453101
1	1520005	ø 9x147	ELEKTRA 00141035
1	1520562	ø 11x108	QUALITY ESPRESSO 08181703
1	1520541	ø 11x119	MAIRALI
1	1520506	ø 11x170	ASTORIA/CMA 21300 - MCE 21300 - WEGA WY21300
1	1520576	ø 11x184	CONTI 4500
1	1520518	ø 12x112	NUOVA SIMONELLI 09000009 - VICTORIA ARDUINO 09000009
1	1520526	ø 12x117	CIMBALI 439-034-000
1	1520532	ø 12x130	CARIMALI 62.00006 - FAEMA 4861117546
1	1520561	ø 12x140	RANCILIO 41010010
1	1520501	ø 12x175	BRUGNETTI/AURORA 000319 - FAEMA - QUALITY ESPRESSO
1	1520543	ø 13x210	MARCFI-ANCAS
1	1520001	ø 15x115	SAN MARCO 206910
2	1201061	ø 10x120	BEZZERA 5430505
2	1201051	ø 10x190	VICTORIA ARDUINO 40900002
2	1520004	ø 11x55	GAGGIA LV0536
2	1201053	ø 11x95	GAGGIA LV0541
2	1201060	ø 11x140	FRACINO FC181
2	1520580	ø 11x145	CONTI
2	1520006	ø 11x154	ASTORIA/CMA 21300001 - SCALA C-0260
2	5025546	ø 11x160	GAGGIA LV0536
2	1520511	ø 11x170	ASTORIA/CMA 56001 - FIORENZATO A1400008 - WEGA WY56001
2	1520400	ø 12x106	GAGGIA WGA4001060000 - PAVONI 453110
2	1520556	ø 12x115	FAEMA - PAVONI 453100
2	1520516	ø 12x135	BEZZERA 5430504 - CIMBALI - NUOVA SIMONELLI 09000010
2	1520542	ø 13x114	MARCFI-ANCAS
2	1520008	ø 13x125	MARCFI-ANCAS BL-5131
2	1201024	ø 13x138	AZKOYEN
2	1520579	ø 22x55	UNIC
2	1520566	ø 30x110	SAN MARCO 104002
3	1201054	ø 11x140	BIANCHI 05256515
4	1520522	ø 11x135	BRASILIA 00787.0.00.02
4	1520100	ø 11x140	GAGGIA LV0524 - GRIMAC GR270 - SANREMO 10402100
4	1520546	ø 11x140	BFC/ROYAL 4580010 - VIBIEMME MATECVELI140
5	1520571	ø 11x150	SPAZIALE 00268
5	1520572	ø 11x150	SPAZIALE 00267
5	1520534	ø 12x106	FAEMA 4861117546
5	1201058	ø 11x135	FIAMMA 5.0.000.1017
6	1449877	ø 10x107	RANCILIO 38228066 - PROMAC 38228066

Photo	LF Code	Dimensions	Material	Suitable for
1	1186680	ø 14.5x9x8 mm	PTFE	GRIMAC 1110300003-GR269

GRIMAC

UNIVERSAL SPOUTS

1 2 3 4

Photo	LF Code	Connection (ø)
1	1022501	3/8
2	1022504	3/8
3	1022503	3/8
4	5031337	3/8

UNIVERSAL SPOUTS

1 2 3 4 5

Photo	LF Code	Connection (ø)
1	1022502	3/8
2	1022521	3/8
3	1022523	3/8
4	1022522	3/8
5	1022551	3/8

"POD" SHOWER SCREENS GRIMAC

1 POD ø 44 mm 2 POD ø 44 mm 3 POD ø 44 mm 4 POD ø 44 mm 5 POD ø 38 mm 6 POD ø 44 mm

Photo	LF Code	Dimensions	Suitable for	For machine model
1	1081067	ø 55 mm TY0 253	GRIMAC 1090600007-MG039/3	AMBRA - DADAVAPORDOUBLE - NUVOLA - OPALE - TERRY
2	1081043	ø 55 mm TY1 277	GRIMAC 1090600004-MG039	AMBRA - DADAVAPORDOUBLE - NUVOLA - OPALE - TERRY
3	1081068	ø 55 mm TY2 349	GRIMAC 1090600005-MG039/1	AMBRA - DADAVAPORDOUBLE - NUVOLA - OPALE - TERRY
4	1081069	ø 55 mm TY3 400	GRIMAC 1090600006-MG039/2	AMBRA - DADAVAPORDOUBLE - NUVOLA - OPALE - TERRY
5	1081070	ø 55 mm TY4 277	GRIMAC 1070100013-MG026	AMBRA - DADAVAPORDOUBLE - NUVOLA - OPALE - TERRY
6	1081076	ø 55 mm TYA 177	GRIMAC 1090600017	AMBRA - DADAVAPORDOUBLE - NUVOLA - OPALE - TERRY

GRIMAC

"PRECISION" SHOWER SCREENS GRIMAC

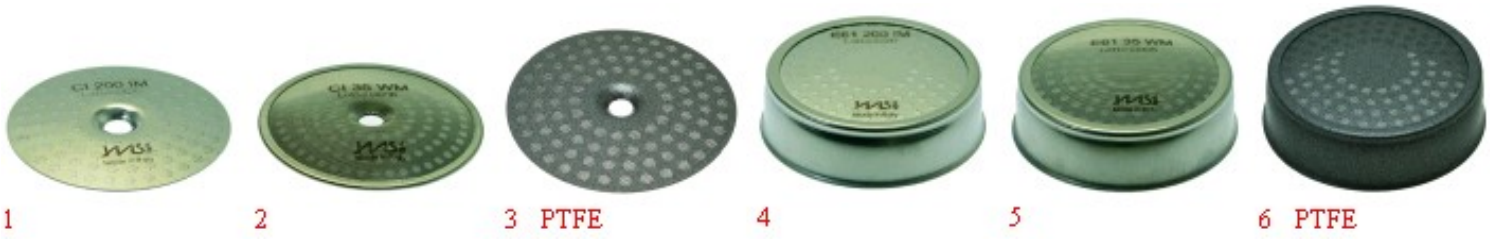

1 2 3 PTFE 4 5 6 PTFE

Photo	LF Code	Dimensions	Membrane	Suitable for	For machine model
1	1460200	ø 51.5 mm	200 µM	GRIMAC	G11
2	1460205	ø 51.5 mm	35 µM	GRIMAC	G11
3	1081400	ø 51.5 mm	200 µM PTFE	GRIMAC	G11
4	1460201	ø 60.0 mm	200 µM	GRIMAC	ECLISSE - G10 - MIA - TEN - TWENTY - ZOLAI - ZOLAII
5	1460206	ø 60.0 mm	35 µM	GRIMAC	ECLISSE - G10 - MIA - TEN - TWENTY - ZOLAI - ZOLAII
6	1081401	ø 60.0 mm	200 µM PTFE	GRIMAC	ECLISSE - G10 - MIA - TEN - TWENTY - ZOLAI - ZOLAII

Docce progettate per ottenere la perfetta estrazione del caffè , acciaio Aisi 316 , certificate alimentare

ASBESTOS FREE FLAT GASKETS

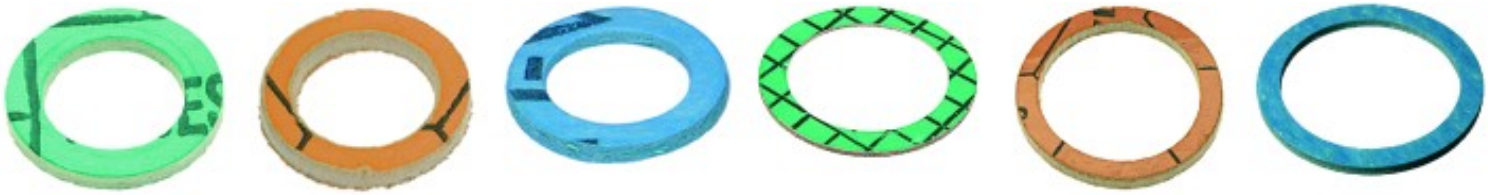

LF Code	Dimensions	Notes
1186042	ø 9x5x1 mm	---
3186341	ø 9x6x1 mm	---
3786349	ø 14x9x2 mm	---
1186041	ø 14.5x10x2 mm	---
1186148	ø 15x7x2 mm	---
3186172	ø 15x9x2 mm	---
1186112	ø 15x10x1 mm	---
1186437	ø 16x12x2 mm	---
1186039	ø 17x13x2 mm	---
1186784	ø 17.5x13x2 mm	---
3786543	ø 18x12x1 mm	---
3786562	ø 18x12x2 mm	---
3786350	ø 18x12x2 mm	---
3186237	ø 19x11x2 mm	---
1186394	ø 22x17x2 mm	---
1186149	ø 22x18x2 mm	---
1186368	ø 23.5x20x1 mm	---
3786351	ø 24x16x2 mm	---
3186575	ø 25x12x2 mm	---
1186340	ø 26x20x2 mm	---
1186183	ø 29x16.5x2 mm	---
1186136	ø 29x22x2 mm	---
3186138	ø 30x21x2 mm	---
1186124	ø 30x24x2 mm	---
3186005	ø 32x26x3 mm	---

GRIMAC

LF Code	Dimensions	Notes
1186141	ø 34x26.5x2 mm	---
1186757	ø 36x30x2 mm	---
3186009	ø 45x33x2 mm	---
1186125	ø 50x38x4 mm	---
1186156	ø 50x40x2 mm	FOR HEATING ELEMENTS BOOSTED - PER RESISTENZE BOOSTED
1786227	ø 54x40x1.5 mm	---
3186010	ø 54x42x2 mm	FOR HEATING ELEMENTS ø 1"1/4 - PER RESISTENZE ø 1"1/4
3786374	ø 57x45x1.5 mm	---
3186242	ø 61x46x2 mm	---
1186636	ø 62x51x2 mm	FOR HEATING ELEMENTS - PER RESISTENZE
3186012	ø 80x60x2 mm	---
3786471	ø 90x77x2 mm	---

BALL VALVES

1 2 3

Photo	LF Code	Connections	Suitable for	For machine model
1	3526706	ø 1/8"FF	UNIVERSAL	---
1	3526698	ø 1/4"FF	BEZZERA 7451501	BZ35 - BZ40 - B2000 - B2013 - B3000 - B4000 - B6000
1	3526698	ø 1/4"FF	SPAZIALE 08103	S5 COMPACT - S8 COMPACT - S9 COMPACT
1	3526702	ø 3/8"FF	UNIVERSAL	---
1	3526703	ø 1/2"FF	UNIVERSAL	---
1	3526707	ø 3/4"FF	UNIVERSAL	---
2	3526697	ø 1/8"MF	SAN MARCO 202241	NEW 105 - 100 - 105 - 85 - 95
2	3526699	ø 1/4"MF	MANY BRANDS - MOLTI MARCHI	SEVERAL APPLICATIONS - MOLTE APPLICAZIONI
2	3526244	ø 1/4"M-1/8"F	SAN MARCO 202244	95 - 105
2	3526704	ø 3/8"MF	MARZOCCO L164	FB70 - FB80 - GB5 - GS3 - LINEA - MISTRAL
2	3526704	ø 3/8"MF	NUOVA SIMONELLI 09000016	APPIA - AURELIA - PREMIER
2	3526704	ø 3/8"MF	VICTORIA ARDUINO 09000016	ADONIS - ATHENA - ATHENA LEVA
2	3526705	ø 1/2"MF	UNIVERSAL	---
3	1525002	ø 1/4"M-1/4"F	ASTORIA/CMA 20227003	PLUS4YOU
3	1525002	ø 1/4"M-1/4"F	WEGA WY20227003	CONCEPT

BOILER GASKETS GRIMAC

1

Photo	LF Code	Dimensions	Material	Suitable for	For machine model
1	1186690	ø 210x170x3 mm - 10 HOLES	PTFE	GRIMAC 1110300001-GR807	ZOLAI - ZOLAII

GRIMAC

BOILER SAFETY VALVES

1

2

Photo	LF Code	Technical notes	Suitable for
1	1515100	ø 3/8"M 1.8 bar CE-PED	ALL BRANDS - TUTTE LE MARCHE
1	1515120	ø 3/8"M 1.9 bar CE-PED	ALL BRANDS - TUTTE LE MARCHE
2	1515110	ø 1/2"M 1.8 bar CE-PED	ALL BRANDS - TUTTE LE MARCHE
2	1523022	ø 1/2"M 1.5 bar CE-PED	SPAZIALE

BOILER SAFETY VALVES

1

2

3

4

5

6

Photo	LF Code	Technical notes	Suitable for
1	1523543	ø M18x1.5 1.8 bar	SAN MARCO OLD - VERSIONI VECCHIE
1	1523545	ø M19x1.5 1.8 bar	GAGGIA OLD - VERSIONI VECCHIE
1	1523544	ø M22x1.5 1.8 bar	PAVONI OLD - VERSIONI VECCHIE
2	1515003	ø 1/4"M 2.1 bar	NUOVA SIMONELLI - VICTORIA ARDUINO
3	1523121	ø 3/8"M 1.5 bar CE-PED	ELEKTRA
3	1523029	ø 3/8"M 1.6 bar CE-PED	EXPOBAR - PROMAC - RANCILIO
3	1523059	ø 3/8"M 1.8 bar CE-PED	ALL BRANDS - TUTTE LE MARCHE
3	1515025	ø 3/8"M 1.9 bar CE-PED	CARIMALI - RANCILIO
3	1515007	ø 3/8"M 2.0 bar CE-PED	CIMBALI - FAEMA
4	1523574	ø 3/8"M 1.1 bar CE-PED	---
4	1523003	ø 3/8"M 1.6 bar CE-PED	BRASILIA - FIAMMA - SAB ITALIA
4	1523572	ø 3/8"M 1.8 bar CE-PED	ALL BRANDS - TUTTE LE MARCHE
5	1523571	ø 1/4"M 1.8 bar CE-PED	---
5	1515004	ø 1/4"M 2.0 bar CE-PED	CASADIO - CIMBALI - FAEMA
5	1515005	ø 3/8"M 1.8 bar CE-PED	SANREMO
6	1515006	ø 3/8"M-3/8"M 1.8 bar CE-PED	BFC - ROYAL
6	1515017	ø 3/8"M-3/4"M 1.8 bar CE-PED	GAGGIA

GRIMAC

BOILER SAFETY VALVES

1 2 3 4

Photo	LF Code	Technical notes	Suitable for
1	1523541	ø 1/4"M 1.8 bar	CIMBALI
2	1515002	ø 3/8"M 2.0 bar CE-PED	GRIMAC - ECM - ECM MANUFACTURE
2	1523054	ø 3/8"M 1.8 bar CE-PED	PAVONI
3	1523021	ø 3/8"M 1.8 bar	SPAZIALE - VIBIEMME
4	1515019	ø 1/2"M 1.8 bar	VIBIEMME

BOTTOMLESS FILTER HOLDERS

LF Code	Suitable for	Wings	Adapter filter for pods	Notes
1165034	Astoria / CMA	6.0 mm	No	---
1165117	Astoria / CMA	6.5 mm	No	Plus 4 you / Concept
1165181	Bezzera	5.8 mm	Yes	---
1165035	Brasilia	5.5 mm	Yes	---
1165038	Carimali	6.0 mm	No	---
1165182	Cimbali	5.5 mm	Yes	---
1165039	Conti	8.0 mm	No	---
1165119	Dalla Corte	9.0 mm	No	---
1165192	Expobar	6.2 mm	Yes	---
1165183	Faema	7.2 mm	Yes	---
1165195	Fiorenzato cs	6.4 mm	Yes	---
1165184	Futurmat	7.2 mm	No	---
1165185	Gaggia	6.6 mm	Yes	---
1165194	Grimac	7.0 mm	Yes	---
1165186	Marzocco	6.5 mm	Yes	---
1165086	Marzocco	6.8 mm	Yes	---
1165118	Nuova Simonelli	7.0 mm	No	Slanted body / Corpo inclinato
5030988	Pavoni	5.6 mm	Yes	---
1165187	Rancilio	6.2 mm	Yes	---
1165185	Saeco	6.6 mm	No	---
1165191	San Marco	7.0 mm	Yes	---
1165193	Sanremo	6.4 mm	Yes	---
5050620	Spaziale	6.0 mm	Yes	---
1165188	Vibiemme	6.2 mm	Yes	---
1165189	Wega	6.4 mm	Yes	---

GRIMAC

BRASS WASHERS

LF Code	Dimensions	Suitable for	Notes
1186446	ø 28x17x2 mm	ASTORIA/CMA 25651	SEVERAL APPLICATIONS - MOLTE APPLICAZIONI
1186035	---	ASTORIA/CMA 25652	FOR LEVEL - PER LIVELLO
1528095	ø 15.4x9x1 mm	ASTORIA/CMA 25653	FOR INLET TAPS - PER RUBINETTI CARICO
1186376	ø 12x8x1 mm	ASTORIA/CMA 25655	FOR STEAM/WATER TAPS - PER RUBINETTI VAPORE/ACQUA
1186298	ø 13x6x0.5 mm	CIMBALI	FOR BREW GROUPS - PER GRUPPI EROGAZIONE
1186380	---	ELEKTRA 01380035	FOR LEVEL - PER LIVELLO
1186319	ø 13.9x8.3x1 mm	FAEMA 4051050569	FOR STEAM/WATER TAPS - PER RUBINETTI VAPORE/ACQUA
1186330	ø 6.8x3.2x0.5 mm	FAEMA 4051136002	FOR BREW GROUPS - PER GRUPPI EROGAZIONE
1528130	ø 26x16.5x1 mm	FAEMA 4051052071	FOR STEAM/WATER TAPS - PER RUBINETTI VAPORE/ACQUA
1186330	ø 6.8x3.2x0.5 mm	FUTURMAT 04527503	FOR BREW GROUPS - PER GRUPPI EROGAZIONE
1186306	ø 10x5x1 mm	FUTURMAT 04715801	FOR BREW GROUPS - PER GRUPPI EROGAZIONE
1186283	ø 14.5x7x2 mm	FUTURMAT 08165508	FOR STEAM/WATER TAPS - PER RUBINETTI VAPORE/ACQUA
1528029	ø 12x7x1 mm	GAGGIA S313001	G105 - G106
1528025	ø 17x12x1 mm	GAGGIA S313003	G105 - G106
1186685	---	GRIMAC 1300900066-GR296	FOR LEVEL - PER LIVELLO
1186732	ø 15x8.4x1 mm	GRIMAC GR354	FOR STEAM/WATER TAPS - PER RUBINETTI VAPORE/ACQUA
1186681	---	GRIMAC GR738	FOR STEAM/WATER TAPS - PER RUBINETTI VAPORE/ACQUA
1528018	ø 14x6.5x0.5 mm	MARZOCCO I.4.001	FOR STEAM/WATER TAPS - PER RUBINETTI VAPORE/ACQUA
1528130	ø 26x16.5x1 mm	MARZOCCO L165/2	FOR BREW GROUPS - PER GRUPPI EROGAZIONE
1186035	---	MCE 25652	FOR LEVEL - PER LIVELLO
1186035	---	ORCHESTRALE D25652	FOR LEVEL - PER LIVELLO
1528029	ø 12x7x1 mm	PAVONI 313001	EUROPICCOLA - PROFESSIONAL - ROMANTICA - STRADIVARI
1528025	ø 17x12x1 mm	PAVONI 313003	EUROPICCOLA - PROFESSIONAL - ROMANTICA - STRADIVARI
1528028	ø 14.5x9.5x1.5 mm	PAVONI 313004	EUROPICCOLA - PROFESSIONAL - STRADIVARI
1186330	ø 6.8x3.2x0.5 mm	PAVONI 401050	FOR BREW GROUPS - PER GRUPPI EROGAZIONE
1186814	---	RANCILIO 23123003	FOR STEAM/WATER TAPS - PER RUBINETTI VAPORE/ACQUA
1186807	ø 18x13x0.5 mm	RANCILIO 23131005	FOR LEVEL - PER LIVELLO
1528017	ø 17x9x1 mm	RANCILIO 32239002	FOR STEAM/WATER TAPS - PER RUBINETTI VAPORE/ACQUA
1186992	ø 15x7x0.8 mm	SAN MARCO 205081	FOR BREW GROUPS - PER GRUPPI EROGAZIONE
1186462	ø 12x8x2 mm	SAN MARCO 205305	FOR INLET TAPS - PER RUBINETTI CARICO
1528018	ø 14x6.5x0.5 mm	SCALA C-0270	FOR STEAM/WATER TAPS - PER RUBINETTI VAPORE/ACQUA
1186732	ø 15x8.4x1 mm	VIBIEMME RACCROGU	FOR STEAM/WATER TAPS - PER RUBINETTI VAPORE/ACQUA
1186330	ø 6.8x3.2x0.5 mm	VIBIEMME RACCROPOGU	FOR STEAM/WATER TAPS - PER RUBINETTI VAPORE/ACQUA
1186306	ø 10x5x1 mm	WEGA W10526	FOR INLET TAPS - PER RUBINETTI CARICO
1186446	ø 28x17x2 mm	WEGA WY25651	SEVERAL APPLICATIONS - MOLTE APPLICAZIONI
1186035	---	WEGA WY25652	FOR LEVEL - PER LIVELLO
1528095	ø 15.4x9x1 mm	WEGA WY25653	FOR INLET TAPS - PER RUBINETTI CARICO
1186376	ø 12x8x1 mm	WEGA WY25655	FOR STEAM/WATER TAPS - PER RUBINETTI VAPORE/ACQUA
1186330	ø 6.8x3.2x0.5 mm	WEGA WY27421011	FOR BREW GROUPS - PER GRUPPI EROGAZIONE

GRIMAC

CAPPUCCINATORE MINI

Photo	LF Code	Suitable for
1	1079001	BRASILIA - GRIMAC - SAECO
2	1079008	GRIMAC - PAVONI - RDL - SAECO - SPINEL
3	1079018	BFC - BRASILIA - GRIMAC - SAECO
4	5500786	BRASILIA - GRIMAC - SAECO
5	1079015	GRIMAC - PAVONI - RDL - SAECO - SPINEL

CAPPUCCINATORE STANDARD

Photo	LF Code	Suitable for
1	1079022	ASTORIA/CMA - CARIMALI - NUOVA SIMONELLI - WEGA
2	1079002	BRASILIA - BRUGNETTI - CARIMALI - NUOVA SIMONELLI
3	1079006	UNIVERSAL

CAPS GRIMAC

Photo	LF Code	Dimensions	Notes	Suitable for	For machine model
1	1439001	ø 16 mm	FOR BREW GROUPS - PER GRUPPI EROGAZIONE	GRIMAC 2231000001-GR713	ECLISSE - TEN - TWENTY - ZOLAI - ZOLAII
2	1439532	ø 3/8"M	FOR BREW GROUPS - PER GRUPPI EROGAZIONE	GRIMAC	G11

GRIMAC

CARBO FLAT GASKETS

LF Code	Dimensions	Suitable for	Notes
1186517	ø 31x21x3 mm	---	---
1186547	ø 32x24x1.5 mm	NUOVA SIMONELLI	FOR BREW GROUPS - PER GRUPPI EROGAZIONE
1186627	ø 41x33x3 mm	---	FOR HEATING ELEMENTS ø 1" - PER RESISTENZE ø 1"
1786215	ø 50x40x2 mm	ASTORIA/CMA	FOR HEATING ELEMENTS BOOSTED - PER RESISTENZE BOOSTED
1186633	ø 53x42x3 mm	---	FOR HEATING ELEMENTS ø 1"1/4 - PER RESISTENZE ø 1"1/4
1186942	ø 55x42x2 mm	ELEKTRA	FOR HEATING ELEMENTS - PER RESISTENZE
1186637	ø 56x47x3 mm	SAN MARCO	FOR HEATING ELEMENTS - PER RESISTENZE
1186606	ø 57x43x3 mm	---	FOR HEATING ELEMENTS MOD FAEMA - PER RESISTENZE MOD FAEMA
1186607	ø 57.8x50x3 mm	CIMBALI	FOR HEATING ELEMENTS - PER RESISTENZE
3186011	ø 63x48x2 mm	RANCILIO	FOR HEATING ELEMENTS - PER RESISTENZE
1186638	ø 67x55x3 mm	NUOVA SIMONELLI	FOR HEATING ELEMENTS - PER RESISTENZE
1186548	ø 73x61.5x1.5 mm	NUOVA SIMONELLI	FOR BREW GROUPS - PER GRUPPI EROGAZIONE
1186320	ø 87x81x0.5 mm	MARZOCCO	FOR BREW GROUPS - PER GRUPPI EROGAZIONE

COFFEE FILTERS GRIMAC

Photo	LF Code	Model	Suitable for	Notes
1	1160251	1 CUP - 6 gr	GRIMAC 1090100004 / A2200221	---
1	1160335	1 CUP - 7 gr	GRIMAC 1090100005 / A2200028	---
2	1160252	2 CUPS - 12 gr	GRIMAC 1090200004 / GR765	---
2	1160337	2 CUPS - 14 gr	GRIMAC 1090200005 / A2200029	---
3	1160345	2 CUPS - 18 gr	GRIMAC	---
1	1160281	1 CUP - 7 gr	GRIMAC	AISI 430 ECONOMIC
2	1160282	2 CUPS - 14 gr	GRIMAC	AISI 430 ECONOMIC
4	1160339	BLIND - CIECO	GRIMAC 1090300002 / A2200030	---

GRIMAC

COFFEE GROUPS AND SPARE PARTS GRIMAC

Photo	LF Code	Suitable for	For machine model
1	1192001	GRIMAC 2200500007-GR501C	ECLISSE - TWENTY - ZOLAI - ZOLAII
2	1192006	GRIMAC 1200500018-GR500C	ECLISSE - TEN - TWENTY - ZOLAI - ZOLAII
3	1027002	GRIMAC 1231300006-GR794	ECLISSE - TWENTY - ZOLAI - ZOLAII
4	1027016	GRIMAC 1201400001-GR717	ECLISSE - TEN - TWENTY - ZOLAI - ZOLAII
5	1349022	GRIMAC GR785	ECLISSE - TWENTY - ZOLAI - ZOLAII
6	1439011	GRIMAC 2231000004-GR720	ECLISSE - TEN - TWENTY - ZOLAI - ZOLAII

COFFEE GROUPS AND SPARE PARTS GRIMAC

Photo	LF Code	Suitable for	For machine model
1	1191022	GRIMAC GR789	ECLISSE - TWENTY - ZOLAI - ZOLAII
2	1439533	GRIMAC 1230800036-GR786	ECLISSE - TWENTY - ZOLAI - ZOLAII
3	1349007	GRIMAC 1201300039-GR726	ECLISSE - TEN - TWENTY - ZOLAI - ZOLAII
4	1439006	GRIMAC 1231000014-F205	ECLISSE - TWENTY - ZOLAI - ZOLAII
5	1349537	GRIMAC GR798	ECLISSE - TWENTY - ZOLAI - ZOLAII
6	1390501	GRIMAC 1201300035-VBM100	ECLISSE - TWENTY - ZOLAI - ZOLAII

COFFEE GROUPS AND SPARE PARTS GRIMAC

Photo	LF Code	Suitable for	For machine model
1	1186313	GRIMAC 1201100017-GR787	ECLISSE - TWENTY - ZOLAI - ZOLAII
2	1349536	GRIMAC GR797	ECLISSE - TWENTY - ZOLAI - ZOLAII
3	1186309	GRIMAC GR750	ECLISSE - TEN - TWENTY - ZOLAI - ZOLAII
4	1523451	GRIMAC	ECLISSE - TWENTY - ZOLAI - ZOLAII
5	1523452	GRIMAC	ECLISSE - TWENTY - ZOLAI - ZOLAII
6	1523453	GRIMAC	ECLISSE - TWENTY - ZOLAI - ZOLAII

GRIMAC

COFFEE GROUPS SPRINKLERS

Photo	LF Code	Dimensions	Hole	Suitable for	For machine model
1	1501565	ø 21 mm M5x1	---	FAEMA 4161133848	COMPACT - DUE - ELITE - ENOVA - EXPRESS - E61
1	1501565	ø 21 mm M5x1	---	FUTURMAT 02476109	---
2	1510004	ø 21 mm M5x1	---	CASADIO 457342000	DIECIA - DIECIS
2	1510004	ø 21 mm M5x1	---	CIMBALI 457-342-000	M27 2008
2	1510004	ø 21 mm M5x1	---	FAEMA 457342000	DUESMART - EMBLEMA - ENOVA - E61 - SMARTRESTY
3	1501560	ø 21 mm M6x1	---	VIBIEMME RACCSPGRKO	EVOLUTION - KOMETA - LOLLO - MINIMAX - SILVER
4	1501007	ø 30 mm M10x1	M5	MCE 27105000	START
4	1501007	ø 30 mm M10x1	M5	ORCHESTRALE D27105000	ETNICA - PHONICA
4	1501007	ø 30 mm M10x1	M5	WEGA WY27105000	AIRY - ATLAS - COLOSSEUM - COMBI NOVA - ESPRESSA - START
5	1501561	ø 30 mm M10x1	---	BEZZERA 7479941	GALATEA - GALATEA DOMUS - GIULIA - UNICA
5	1501561	ø 30 mm M10x1	---	BFC 0520070	CLASSICA - DELUX - GALILEO - IMOLA - JUNIOR - LA VITTORIA
5	1501561	ø 30 mm M10x1	---	BIANCHI 43051216	LUCIA - SARA - SOFIA
5	1501561	ø 30 mm M10x1	---	BRASILIA 04089.0.00.04	GRADISCA
5	1501561	ø 30 mm M10x1	---	ECM C229901128	GIOTTO - LAURA - VENEZIANO
5	1501561	ø 30 mm M10x1	---	ECM MANUFACTURE C229901128	CLASSIKA II - ELEKTRONICA II PROFI - ELEKTRONIKA II PROFI
5	1501561	ø 30 mm M10x1	---	EXPOBAR CTAV1-11	EB61 - OFFICE
5	1501561	ø 30 mm M10x1	---	FAEMA	E61
5	1501561	ø 30 mm M10x1	---	FIAMMA RST 5.0.025.0009	ATLANTIC - MARINA - PRESTIGE
5	1501561	ø 30 mm M10x1	---	FIORENZATO C.S A2200170	BRICOLETTA - COLOMBINA - DUCALE - FENICE - LIDO - VOLANTE
5	1501561	ø 30 mm M10x1	---	FUTURMAT 02012904	ARIETE - CUSTOM - F3 - RIMINI
5	1501561	ø 30 mm M10x1	---	GAGGIA SPAGNA 02012904	BELLA - G6 - KB
5	1501561	ø 30 mm M10x1	---	GRIMAC 1201300006-GR762	ECLISSE - MIA - TEN - TWENTY - ZOLA I - ZOLA II
5	1501561	ø 30 mm M10x1	---	ITALCREM 02012904	IT4
5	1501561	ø 30 mm M10x1	---	MAIRALI 02012904	ARIANNE
5	1501561	ø 30 mm M10x1	---	PAVONI	BART
5	1501561	ø 30 mm M10x1	---	PROMAC 80230080	COMPACT - GREEN
5	1501561	ø 30 mm M10x1	---	RENEKA AT7479941	AMICI - ATALANTE
5	1501561	ø 30 mm M10x1	---	ROYAL 0520070	DIADEMA - SYNCHRO
5	1501561	ø 30 mm M10x1	---	SAB TM-SPR8F400	ELLIPSE - E96 - MODERNA
5	1501561	ø 30 mm M10x1	---	SANREMO 10052141	AMALFI - CAPRI - MILANO LX - PISA - TORINO - TREVISO
5	1501561	ø 30 mm M10x1	---	SCALA C-0318	BUTTERFLY - CARMEN - EROICA
5	1501561	ø 30 mm M10x1	---	VFA	ELITE - MAGESTIC - SPLENDOR
5	1501561	ø 30 mm M10x1	---	VIBIEMME RACCSPGR	CHIMAERA - DOMOBAR - DOSAPLUS - MERCURY - REPLICA
5	1501561	ø 30 mm M10x1	---	VISACREM 02012904	BRAVA - V6
5	1501561	ø 30 mm M10x1	---	WEGA WY27105	AIRY - ATLAS - ATLAS10 - NOVA - NOVECENTO - ORION ECO - P
6	1501568	ø 30 mm M10x1	M5	PAVONI 314098	P UNO - P TRE
6	1501014	ø 30 mm M9.6x1	M5	BRUGNETTI/AURORA 000183	ALEXIA - C

GRIMAC

COFFEE GROUPS SPRINKLERS

1 2 3

Photo	LF Code	Dimensions	Hole	Suitable for	For machine model
1	1510006	ø 10.5 mm M12x1 H12	---	SPINEL SR.000.021.001	DUELUX - DUETTOLUX - ESSE - MINIMINI - MINIMINILUX
2	1510001	ø 11.0 mm M12x1 H12	---	GRIMAC 1300300003-MG184	AMBRA - DADAVAPORDOUBLE - NEWCIALDAVAPOR - NUVOLA - OPALE
3	1510003	ø 12.0 mm M12x1 H13	---	PAVONI 0R11180130	MICROPOD
3	1510003	ø 12.0 mm M12x1 H13	---	RDL 11180130	MAXI - MINI - SWEET

CONTACT THERMOSTATS GRIMAC

1 2 3 4

Photo	LF Code	Temperature °C	Suitable for	For machine model
1	1444506	90	GRIMAC 1161000002-MG010	DADAVAPORDOUBLE - NUVOLA - OPALE - TERRY
1	1444003	95	GRIMAC 1161000003-MG011/2	AMBRA - NUVOLA - OPALE - TERRY
2	5027936	125	GRIMAC 1161000001-MG009	---
3	1444206	145	GRIMAC 1161000014-MG707	AMBRA - NUVOLA - OPALE - TERRY
4	1444521	155	GRIMAC 1161000013-G611/1	DADAVAPORDOUBLE - NUVOLA - OPALE
4	1443034	200	GRIMAC 1161000008-MG564	NUVOLA - OPALE

CONTROL BOXES GRIMAC

1 2 3 4

Photo	LF Code	For machines with no. of groups	Power	Suitable for	For machine model
2	1054101	2	230V	GRIMAC GRC103 - 1040200008	ECLISSE - G10
2	1054102	3	230V	GRIMAC GRT104 - 1040200009	G10
4	1054025	2	230V	GRIMAC A1500072	G11
1	1054043	1	230V	GRIMAC MG282 - 1040200001	MIA - NEWCIALDAVAPOR
3	1054042	2	230V	GRIMAC GRW156 - 1040200013	TWENTY

GRIMAC

DRAIN TANKS GRIMAC

1 2

Photo	LF Code	Notes	Suitable for	For machine model
1	1527511	78x68 mm - ø 15 mm	GRIMAC A1600002	G11
2	1527504	ø 80 mm - ø 3/8"	GRIMAC 12105000016-GR818	ZOLAI - ZOLAII

DRIP GRIDS GRIMAC

1 2 3

Photo	LF Code	Dimensions (mm)	Suitable for	For machine model
1	1185027	588x160	GRIMAC 1310200022-GRT003	G10 - TEN - TWENTY
1	1185028	767x160	GRIMAC 1310200023-GRT052	G10 - TEN - TWENTY
1	1185024	622x150	GRIMAC 1310200010-GR018	ZOLAI - ZOLAII
1	1185025	788x150	GRIMAC 1310200011-GR019	ZOLAI - ZOLAII
1	1185026	488x160	GRIMAC 1310200021-GRC008	ECLISSE
2	1185016	240x88	GRIMAC 1310200020-MG510	NUVOLA
3	1185017	200x88	GRIMAC 1310200018-MG508	DADAVAPORDOUBLE - TERRY

DRIP TRAYS GRIMAC

1 2

Photo	LF Code	Colour	Suitable for	For machine model
1	1015018	BLACK - NERA	GRIMAC 2210500011-MG522N	NUVOLA
2	1015017	BLACK - NERA	GRIMAC 2210500034-MG903	TERRY

GRIMAC

EPDM FLAT GASKETS

LF Code	Dimensions	Suitable for	Notes
1186427	ø 10x4x2 mm	RANCILIO	FOR BREW GROUPS - PER GRUPPI EROGAZIONE
1186758	ø 10x4.5x4 mm	MARCFI-ANCAS	FOR INLET TAPS - PER RUBINETTI CARICO
1186342	ø 11x3x4 mm	CIMBALI - FAEMA	FOR STEAM/WATER TAPS - PER RUBINETTI VAPORE/ACQUA
1186454	ø 11x3.6x2 mm	PROMAC - RANCILIO	FOR INLET TAPS - PER RUBINETTI CARICO
1186423	ø 11x4x4 mm	BRASILIA	FOR INLET TAPS - PER RUBINETTI CARICO
1186703	ø 11x7x7 mm	CIMBALI	FOR BREW GROUPS M15- PER GRUPPI EROGAZIONE M15
1186083	ø 12x3x4 mm	RENEKA	FOR STEAM/WATER TAPS - PER RUBINETTI VAPORE/ACQUA
1786263	ø 12.5x8x9 mm	ASTORIA/CMA - WEGA	FOR STEAM/WATER TAPS - PER RUBINETTI VAPORE/ACQUA
1186588	ø 13x3x4 mm	AZKOYEN	FOR STEAM/WATER TAPS - PER RUBINETTI VAPORE/ACQUA
1186161	ø 13x4x4 mm	BRASILIA - CONTI - RENEKA	FOR STEAM/WATER TAPS - PER RUBINETTI VAPORE/ACQUA
1186935	ø 13x4x4 mm	ELEKTRA	FOR STEAM/WATER TAPS - PER RUBINETTI VAPORE/ACQUA
1186935	ø 13x4x4 mm	GRIMAC	FOR BREW GROUPS - PER GRUPPI EROGAZIONE
1186150	ø 13x7.4x7 mm	SAN MARCO	FOR INLET TAPS - PER RUBINETTI CARICO
1186111	ø 14x4x4 mm	BEZZERA	FOR STEAM/WATER TAPS - PER RUBINETTI VAPORE/ACQUA
1186111	ø 14x4x4 mm	SAN MARCO	FOR BREW GROUPS - PER GRUPPI EROGAZIONE
1186302	ø 14x4x5 mm	CARIMALI	FOR STEAM/WATER TAPS - PER RUBINETTI VAPORE/ACQUA
1186316	ø 15x4x4 mm 60SH	ASTORIA/CMA - WEGA	FOR STEAM/WATER TAPS - PER RUBINETTI VAPORE/ACQUA
1186527	ø 15x4x4 mm 80SH	ASTORIA/CMA - WEGA	FOR STEAM/WATER TAPS - PER RUBINETTI VAPORE/ACQUA
1186515	ø 15x5.5x3.5 mm	SPAZIALE	FOR STEAM/WATER TAPS - PER RUBINETTI VAPORE/ACQUA
1186369	ø 15x5.5x4 mm	FUTURMAT	FOR BREW GROUPS - PER GRUPPI EROGAZIONE
1186369	ø 15x5.5x4 mm	SAN MARCO	FOR STEAM/WATER TAPS - PER RUBINETTI VAPORE/ACQUA
1186985	ø 15x6x6 mm	GAGGIA	FOR STEAM/WATER TAPS - PER RUBINETTI VAPORE/ACQUA
1186985	ø 15x6x6 mm	PAVONI	FOR STEAM/WATER TAPS - PER RUBINETTI VAPORE/ACQUA
1186300	ø 15x7.3x4 mm	CIMBALI	FOR STEAM/WATER TAPS - PER RUBINETTI VAPORE/ACQUA
1186300	ø 15x7.3x4 mm	GRIMAC	FOR STEAM/WATER TAPS - PER RUBINETTI VAPORE/ACQUA
1186057	ø 15.3x7.7x4 mm	BRASILIA	FOR STEAM/WATER TAPS - PER RUBINETTI VAPORE/ACQUA
1186312	ø 15.5x7.5x4 mm	MANY BRANDS - MOLTI MARCHI	SEVERAL APPLICATIONS - MOLTE APPLICAZIONI
1186233	ø 16x4x5 mm	UNIC	FOR STEAM/WATER TAPS - PER RUBINETTI VAPORE/ACQUA
1186282	ø 16.5x6x4 mm	SAN MARCO	FOR BREW GROUPS - PER GRUPPI EROGAZIONE
1186170	ø 18x4x4 mm	CARIMALI	FOR STEAM/WATER TAPS - PER RUBINETTI VAPORE/ACQUA
3449039	ø 18x11x2 mm	---	FOR INLET HOSES ø 1/2" - PER TUBI CARICO ø 1/2"
1186102	ø 19x3.5x4 mm	BEZZERA	FOR STEAM/WATER TAPS - PER RUBINETTI VAPORE/ACQUA
1186958	ø 20.5x15x2 mm	CIMBALI	FOR STEAM/WATER TAPS - PER RUBINETTI VAPORE/ACQUA
1186066	ø 21x15x3 mm	BRASILIA	FOR STEAM/WATER TAPS - PER RUBINETTI VAPORE/ACQUA
1186410	ø 21x16x2 mm	RANCILIO	FOR BREW GROUPS - PER GRUPPI EROGAZIONE
1186410	ø 21x16x2 mm	RENEKA	FOR STEAM/WATER TAPS - PER RUBINETTI VAPORE/ACQUA
1786222	ø 22x18x1.5 mm	CIMBALI	FOR BOOSTER PUMPS - PER POMPE VOLUMETRICHE
3449026	ø 24x12x2 mm	---	FOR INLET HOSES ø 3/4" - PER TUBI CARICO ø 3/4"
1786231	ø 24x15x3 mm	GAGGIA	FOR INLET TAPS - PER RUBINETTI CARICO
1786231	ø 24x15x3 mm	PAVONI	FOR STEAM/WATER TAPS - PER RUBINETTI VAPORE/ACQUA
1786315	ø 51.3x43x5 mm	ISOMAC	FOR BREW GROUPS - PER GRUPPI EROGAZIONE

GRIMAC

EXPANSION AND NON-RETURN VALVES "UNIVERSAL"

1

2

3

4

5

Photo	LF Code	Dimensions
1	1523036	ø 1/8"M-1/8"F
2	1523700	ø 1/8"M-1/8"M
3	3349281	ø 3/8"F-3/8"F
4	3349283	ø 3/4"F-3/4"F
5	1523072	ø 3/8"M

FILTER HOLDER GASKETS GRIMAC

1

Photo	LF Code	Dimensions (mm)	Notes	Suitable for	For machine model
1	1186722	ø 73x57x8	---	GRIMAC 1110600015/F015	ECLISSE - G10 - LAUNO - MIA - TEN - TWENTY - ZOLAI - ZOLA
1	1186723	ø 73x57x8.5	---	GRIMAC 1110600016/F016	ECLISSE - G10 - LAUNO - MIA - TEN - TWENTY - ZOLAI - ZOLA
1	1186724	ø 73x57x9	---	GRIMAC 1110600017	ECLISSE - G10 - LAUNO - MIA - TEN - TWENTY - ZOLAI - ZOLA
1	1486724	ø 73x57x10	---	GRIMAC	ECLISSE - G10 - LAUNO - MIA - TEN - TWENTY - ZOLAI - ZOLA
1	1186891	ø 73x57x8	75 SH	GRIMAC 1110600035	ECLISSE - G10 - LAUNO - MIA - TEN - TWENTY - ZOLAI - ZOLA
1	1186622	ø 72x56x8	---	GRIMAC A1200181	G11

FILTER HOLDER GRIMAC

1

2

3

Photo	LF Code	Wings	Knob	Spouts	Filter	Spring	Suitable for	For machine model
1	1165040	7 mm	M12	3/8	7 gr	YES	GRIMAC A2200078	G11
2	1165042	7 mm	M12	3/8	14 gr	YES	GRIMAC A2200079	G11
3	1165022	7 mm	M12	3/8	NO	NO	GRIMAC 1200100021-GR767	ZOLAI - ZOLAII - TEN - TWENTY - ECLISSE - G11

GRIMAC

FILTER LOCKING SPRING

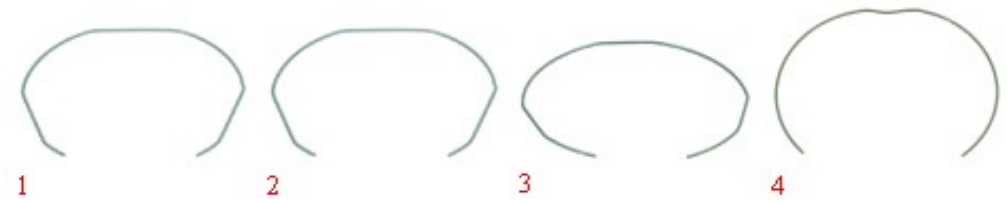

Photo	LF Code	wire ø (mm)	Suitable for
1	1250101	1.00	ALL BRANDS - TUTTI I MARCHI
1	1250002	1.20	ALL BRANDS - TUTTI I MARCHI
1	1250333	1.30	ALL BRANDS - TUTTI I MARCHI
1	1250338	1.40	ALL BRANDS - TUTTI I MARCHI
2	1250279	1.40	ASTORIA/CMA P4Y - WEGA CONCEPT 52
3	5033397	1.00	PAVONI EUROPICCOLA
4	1250018	1.00	ELEKTRA MICROCASA

GASKETS "OR" R1-R2-R3....R10..

1.90 - 2.20
2.70 - 3.60 mm

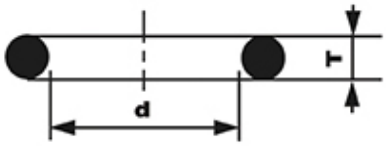

Dimensions (mm) T x d	Model (new cross-references)	Model (old cross-references)	LF Code (EPDM)	LF Code (VITON)	LF Code (SILICONE)
1.90 x 2.40	OR R0		1786108		
1.90 x 3.40	OR R2		2104557		
1.90 x 4.20	OR R3		1186996	1786316	
1.90 x 4.90	OR R4		1786286		
1.90 x 5.70	OR R5		1186854	1786310	1186610
1.90 x 7.20	OR R6		1186556	1186791	
2.70 x 12.10	OR R10		1786297		
3.60 x 23.00	OR R18		1786157		

GASKETS FOR GROUP ADJUSTABLE TO SEVERAL BRANDS

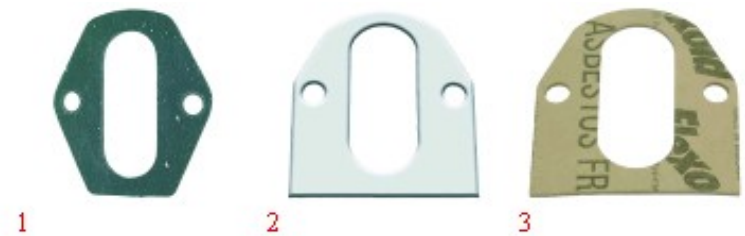

Photo	LF Code	Features	Suitable for	For machine model
1	1186502	79x71x2 mm - CARBO	MANY BRANDS - MOLTI MARCHI	FOR MODEL E61 GROUPS - PER GRUPPI TIPO E61
2	1186508	77x73x2 mm - PTFE	MANY BRANDS - MOLTI MARCHI	FOR MODEL E61 GROUPS - PER GRUPPI TIPO E61
3	1186384	80x70x2 mm - PAPER	MANY BRANDS - MOLTI MARCHI	FOR MODEL E61 GROUPS - PER GRUPPI TIPO E61

GRIMAC

GASKETS ORM

Model	Notes	LF Code	Suitable for
0060-10	SILICON RED	1186550	ASTORIA/CMA 12300013
0250-40	NBR BLACK	1186772	ASTORIA/CMA 12300027
0170-30	NBR BLACK	1186773	ASTORIA/CMA 12336000
0050-15	EPDM BLACK	1786219	ASTORIA/CMA 12662000
0040-20	SILICON RED	1786257	BIANCHI 43113416-01
0140-20	NBR BLACK	1186484	BRASILIA 18514.0.00.02
0160-20	EPDM BLACK	1186165	BRASILIA 18682.0.00.02
0059-12	EPDM BLACK	5034069	CARIMALI 87.00169
0160-20	EPDM BLACK	1186165	CARIMALI 95.05027
0057-19	VITON GREEN	1186966	CASADIO 402198000
0057-19	VITON GREEN	1186966	CIMBALI 402-198-000
0089-27	VITON GREEN	1186968	CIMBALI 402-197-000
0680-20	EPDM BLACK	1186381	CONTI 173100
0040-20	EPDM BLACK	1186252	CONTI 403457
0120-20	VITON GREEN	1186157	CONTI 409631
0060-10	EPDM BLACK	1786071	CONTI 410838
0248-18	SILICON BLACK	1786269	DELONGHI 5313214431
0045-20	SILICON BLACK	1786265	DELONGHI 5313217691
0038-20	SILICON BLACK	1786264	DELONGHI 5313217701
0060-20	SILICON RED	1186867	DELONGHI 5332144800
0350-41	SILICON RED	1486015	DELONGHI 5332149100
0060-36	SILICON BLACK	1486016	DELONGHI 5332173500
0060-10	EPDM BLACK	1786071	EXPOBAR 50010090
0057-19	VITON GREEN	1186966	FAEMA 402198000
0089-27	VITON GREEN	1186968	FAEMA 402197000
0780-30	EPDM BLACK	1186507	FAEMA 4701026909
0040-20	EPDM BLACK	1186252	FAEMA 4701030708
0060-18	EPDM BLACK	1786302	FIAMMA RST 5.0.002.0122
0017-20	EPDM BLACK	1786295	FIAMMA RST 5.0.016.0225
0060-12	EPDM BLACK	1186713	FIAMMA RST 5.0.016.0323
0058-20	VITON BLACK	1786304	FRACINO FC222SG
0040-20	EPDM BLACK	1186252	FUTURMAT 03070802
0060-30	SILICON BLACK	5008675	GAGGIA 140324362
0080-20	VITON BLACK	1186687	GRIMAC 1110800040-GR756
0050-20	VITON BLACK	1186778	MARZOCCO H.1.005
0059-12	EPDM BLACK	5034069	NUOVA SIMONELLI 02280036
0160-20	EPDM BLACK	1186165	NUOVA SIMONELLI 02280037
0102-25	PTFE	1786260	NUOVA SIMONELLI 02600004
0080-20	EPDM BLACK	1786149	PAVONI 0ENM02004
0500-40	SILICON RED	1186453	RANCILIO 36404113
0072-15	EPDM BLACK	1786063	RENEKA 9001884
0170-20	EPDM BLACK	1786064	RENEKA 9005075
0030-15	EPDM BLACK	1186855	SAECO 12000414
0080-20	SILICON RED	1186852	SAECO 140320459
0080-20	TERMOIL BLACK	1786111	SAECO 140320461
0090-20	SILICON RED	1186647	SAECO 140320762
0060-30	SILICON BLACK	5008675	SAECO 140324362

GRIMAC

Model	Notes	LF Code	Suitable for
0060-20	SILICON RED	1186867	SAECO 140324459
0080-15	EPDM BLACK	1186675	SAECO 140324961
0040-20	EPDM BLACK	1186252	SAECO 140326661
0380-40	SILICON RED	1186856	SAECO 140329262
0320-40	SILICON RED	1186862	SAECO NM01.044
0050-20	SILICON RED	1186648	SAECO NM01.057
0080-20	EPDM BLACK	1786149	SAECO NM02.004
0055-15	EPDM BLACK	1786150	SAECO NM02.017
0090-25	EPDM BLACK	1786074	SAECO NM02.018
0040-20	EPDM BLACK	1186252	SPAZIALE 04649
0160-20	EPDM BLACK	1186712	SPAZIALE 08289
0060-12	EPDM BLACK	1186713	SPAZIALE 08354
0060-10	SILICON RED	1186550	SPINEL SR.000.060.042
0017-20	EPDM BLACK	1786295	VIBIEMME GUARORVALESPE
0060-10	SILICON RED	1186550	WEGA WY12300013
0250-40	NBR BLACK	1186772	WEGA WY12300027

HANDLES GRIMAC

Photo	LF Code	Notes	Suitable for	For machine model
1	1241333	STEAM - VAPORE	GRIMAC 1210200002-GRC632	G11 - ZOLAI
1	1241609	WATER - ACQUA	GRIMAC 1210200003-GRC634	ZOLAI
2	1241606	STEAM - VAPORE	GRIMAC 2210200009-GR288	ZOLAII
2	1241608	WATER - ACQUA	GRIMAC 2210200008-GR289	ZOLAII
3	1241164	STEAM - VAPORE	GRIMAC 2210200011-GR292	G10 - MIA - NEW CIALDA VAPOR
3	1241164	STEAM - VAPORE	GRIMAC 2210200011-GR292	G10 - NEW CIALDA VAPOR
4	1241601	STEAM - VAPORE	GRIMAC 1211000001-GRC631	---
4	1241602	WATER - ACQUA	GRIMAC 1211000002-GRC633	---
5	1241461	STEAM - VAPORE	GRIMAC 2210200003-GR331	ZOLAII

HEATING ELEMENTS GRIMAC

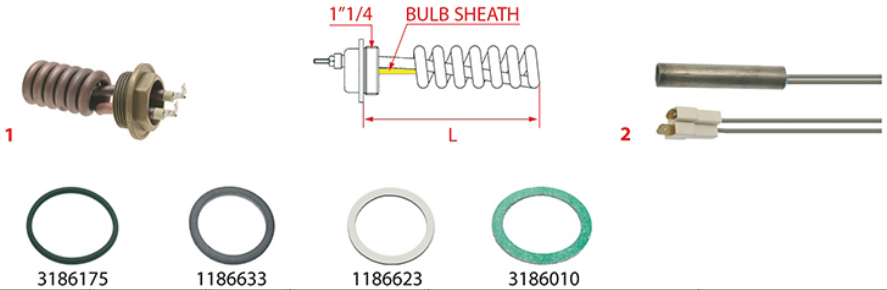

Photo	LF Code	Watt - Volt	L (mm)	Groups	Bulb sheath	Suitable for	For machine model
1	1755603	1300W 230V	105	1	NO	GRIMAC 1240100216-W902	MIA - NEWCIALDAVAPOR - VAPORDOUBLE
2	1755180	500W 230V	ø 12.5x80	1	---	GRIMAC 1240200001-MG353	AMBRA - DADAVAPORDOUBLE - NEWCIALDAVAPOR
2	1755181	800W 230V	ø 12.5x90	1	---	GRIMAC 1240200005-MG549	DADAVAPORDOUBLE - NUVOLA - OPALE

GRIMAC

HEATING ELEMENTS GRIMAC

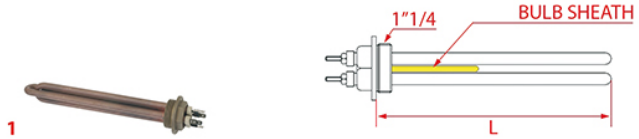

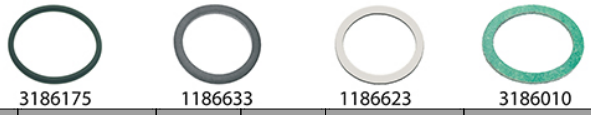

Photo	LF Code	Watt - Volt	L (mm)	Groups	Bulb sheath	Suitable for	For machine model
1	1755403	3300W 230V	230	2	NO	GRIMAC 1240100127-GRC102	ECLISSE - G10 - TEN - TWENTY
1	1755404	4500W 230V	345	3	NO	GRIMAC 1240100129-GRT103	G10 - TEN - TWENTY

HEATING ELEMENTS GRIMAC

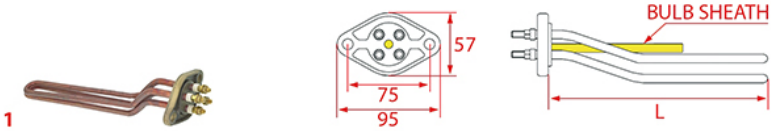

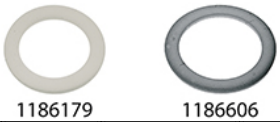

Photo	LF Code	Watt - Volt	L (mm)	Groups	Bulb sheath	Suitable for	For machine model
1	1755400	3200W 230V	340	2	NO	GRIMAC 1240100121-GR705	ZOLAI - ZOLAII
1	1755401	4500W 230V	470	3	NO	GRIMAC 1240100124-GR706	ZOLAI - ZOLAII
1	1755402	6000W 230V	630	4	NO	GRIMAC 1240100084-GR707	ZOLAI - ZOLAII

HEATING ELEMENTS GRIMAC

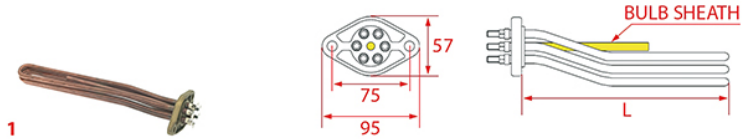

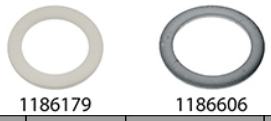

Photo	LF Code	Watt - Volt	L (mm)	Groups	Bulb sheath	Suitable for	For machine model
1	1755011	3500W 230V	300	2	YES	GRIMAC A2100031	G11
1	1755012	4000W 230V	555	3	YES	GRIMAC A2100120	G11

GRIMAC

INDICATOR LIGHTS GRIMAC

1 2 3

Photo	LF Code	Volt	ø head - ø hole - °C	Suitable for	For machine model
1	3221080	230V	ø 13.5 mm - ø 10 mm - 120°C	GRIMAC 1160600004-MG077	MIA - NEWCIALDAVAPOR - VAPORDOUBLE
2	3221095	230V	ø 13.5 mm - ø 10 mm - 120°C	GRIMAC A2100046	G11
3	1221040	240V	---	GRIMAC 1160600008-MG547	DADAVAPORDOUBLE - NUVOLA - OPALE - TERRY

LEVEL GLASS BALLS

1 2 3

Photo	LF Code	Dimensions (mm)	Suitable for
1	1323006	ø 7	ALL BRANDS - TUTTE LE MARCHE
2	1323001	ø 5.8	ALL BRANDS - TUTTE LE MARCHE
3	1323007	ø 9,5	ALL BRANDS - TUTTE LE MARCHE

LEVEL GLASS GASKETS

1 2 3 4 5 6

Photo	LF Code	Dimensions (mm)	Suitable for
1	1186173	ø 16.5x10x12.5	MARCFI-ANCAS
1	1186221	ø 19x11.5x10	CARIMALI - CONTI - NUOVA SIMONELLI
2	1186270	ø 18x11x4	CONTI
2	1186227	ø 21x11.5x5	BRUGNETTI/AURORA - FAEMA - FUTURMAT
2	1186251	ø 18x12x3	RANCILIO
2	1186360	ø 18x12x2	CIMBALI
3	1401002	ø 14.5x10x7	BEZZERA
4	1186206	ø 16x10x8	ASTORIA/CMA - BFC - GRIMAC - NUOVA SIMONELLI - ROYAL
5	1186375	ø 15x9x8	ELEKTRA
5	1186469	ø 15x9x5	GAGGIA - PAVONI
6	1186498	ø 14.5x11x2	EXPOBAR
6	1186256	ø 31x19x3	SAN MARCO
6	1186266	ø 26x12x7	UNIC

GRIMAC

LEVEL PROBES GRIMAC

1 2 3

Photo	LF Code	Notes	Suitable for	For machine model
1	1341750	ø 1/4"M-125 mm	GRIMAC 2250400003-GRC605	ECLISSE - TEN
2	1341752	ø 1/4"M-148 mm	GRIMAC 1250400006-GR212B	G10 - G11
3	1341751	ø 1/4"M-150 mm	GRIMAC GR212	TWENTY - ZOLA I - ZOLA II

LEVEL REGULATORS GRIMAC

1 2 3

Photo	LF Code	Features	Suitable for	For machine model
1	1341015	230/240V 50/60Hz 8A	GRIMAC A1500082	G11
2	1341036	MFC2SG 220V	GRIMAC 1040100002	MIA - NEWCIALDAVAPOR - VAPORDOUBLE
3	1341316	RLC302CF 230V	GRIMAC 1040100006-GR778	ECLISSE - G10 - TEN - TWENTY - ZOLAI - ZOLAII

LIP GASKETS GRIMAC

1

Photo	LF Code	Dimensions (mm)	Suitable for	For machine model
1	1186491	ø 14x7x5	GRIMAC 1110100010-AS003	MIA - NEWCIALDAVAPOR - NEWCIALDAVAPORDOUBLE

GRIMAC

MICROSWITCHES GRIMAC

1 2

Photo	LF Code	Volt	Suitable for	For machine model
1	1240821	10A 250V	GRIMAC GR779	ECLISSE - TWENTY - ZOLAI - ZOLAII
2	1240841	15A 250V	GRIMAC 1160300035-W612	---

MOTORS GRIMAC

1 2 3 4 5

Photo	LF Code	Model	Suitable for	For machine model
1	1240072	150W 230V 1.2A 50/60Hz	GRIMAC A1900087	G11
2	1240281	C013723 - 120W 230V 50/60Hz	GRIMAC 1190100005-GRC101	ECLISSE - G10 - TEN - TWENTY
3	1240702	11002728 - 165W 220V 50Hz	GRIMAC 1190100001-GR813	G10
4	1240703	11002755 - 165W 220V 50Hz	GRIMAC 1190100004-GR172	ZOLAI - ZOLAII
5	1240602	11053704 - 330W 220/240V 50/60Hz	GRIMAC 1190100004-GR172	ZOLAI - ZOLAII

MUSHROOM GASKETS

1 2 3 4 5

Photo	LF Code	Dimensions	Material	Suitable for	For machine model
1	1192088	---	SILICON	SAECO 9161.320	IDEA - ROYALOFFICE
2	1786080	ø 6/8 mm - H 9 mm	SILICON	GRIMAC 1110100001-MG015/2	AMBRA - DADAVAPORDOUBLE - OPALE - TERRY
2	1786080	ø 6/8 mm - H 9 mm	SILICON	PAVONI 0R13330010	MICROPOD
2	1786080	ø 6/8 mm - H 9 mm	SILICON	RDL 13330010	MAXI - MINI - MINICAP - SWEET
3	1786162	ø 6/9 mm - H 8.5 mm	SILICON	NUOVA SIMONELLI 02540004	JAZZ
3	1786162	ø 6/9 mm - H 8.5 mm	SILICON	VICTORIA ARDUINO 02540004	VENUSCENTURY
4	1786282	ø 3.5/6 mm - H 8 mm	SILICON	DELONGHI 5332148400	ECOV310AZ - EC155 - EC300M - ESAM5400 - ESAM5400EX
5	1786314	ø 6/7 mm - H 8 mm	SILICON	ISOMAC IS000805	GIADA - MAVERICK

GRIMAC

NBR FLAT GASKETS

1 2

Photo	LF Code	Dimensions	Suitable for	Notes
1	1186474	ø 12x7x5 mm	GAGGIA	FOR STEAM/WATER TAPS - PER RUBINETTI VAPORE/ACQUA
1	1186474	ø 12x7x5 mm	PAVONI	FOR STEAM/WATER TAPS - PER RUBINETTI VAPORE/ACQUA
2	1186311	ø 13x4x4 mm	MANY BRANDS - MOLTI MARCHI	SEVERAL APPLICATIONS - MOLTE APPLICAZIONI

NOZZLES GRIMAC

1

Photo	LF Code	Notes	Suitable for	For machine model
1	1501566	M6x1 - ø 0.5 mm	GRIMAC 1201600005-F213	---
1	1501522	M6x1 - ø 0.75 mm	GRIMAC A2200174-GR715	ECLISSE - TEN - TWENTY - ZOLA I - ZOLA II
1	1501541	M6x1 - ø 0.8 mm	GRIMAC 1201600004	MIA

O-RING GASKETS THICKNESS 2.62 mm

2.62 mm

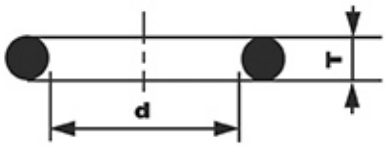

Dimensions (mm) T x d	Model (new cross-references)	Model (old cross-references)	LF Code (EPDM)	LF Code (VITON) STANDARD	LF Code (SILICONE) RED	LF Code (VITON) MIX COLOR	LF Code (SILICONE) MIX COLOR
2.62 x 6.02	OR 03024		3786668		1786137		
2.62 x 7.59	OR 03030		1186358	1786155	1786280	1786197	
2.62 x 9.13	OR 0109	OR 0109	1186255	5029740	1186910		3186608
2.62 x 9.19	OR 03037	OR 0111	3186340	1786202			
2.62 x 9.92	OR 0112	OR 0112	1186304		1786049	1186879	1186914
2.62 x 10.78	OR 03043	OR 0113	1186318		3786719	1186236	
2.62 x 11.91	OR 0115	OR 0115	1186805	1186709	1186745		
2.62 x 12.37	OR 03050	OR 0116	3060608	3090132	1186458		
2.62 x 13.10	OR 0117	OR 0117	3243086		1186085		1786234
2.62 x 13.95	OR 03056	OR 0118	3186860		1186762		
2.62 x 15.08	OR 0119	OR 0119	1186414	1186714	3523062		
2.62 x 15.88	OR 0121	OR 0121	3186434	1186246			
2.62 x 17.13	OR 03068	OR 0122	3186181	1786276	1186850		

GRIMAC

Dimensions (mm) T x d	Model (new cross-references)	Model (old cross-references)	LF Code (EPDM)	LF Code (VITON) STANDARD	LF Code (SILICONE) RED	LF Code (VITON) MIX COLOR	LF Code (SILICONE) MIX COLOR
2.62 x 17.86	OR 0123	OR 0123	3186287		1186000		1199001
2.62 x 18.72	OR 03075	OR 0124	1186356		5059295		
2.62 x 20.24	OR 03081	OR 0127	1186327	5039864	1186026		1186053
2.62 x 20.63	OR 0128	OR 0128	3186183	1186591		1786300	
2.62 x 21.89	OR 03087		1786233		1186796		
2.62 x 22.22	OR 0130	OR 0130	3186253		1186292		
2.62 x 23.47	OR 03093		1186922				
2.62 x 23.81	OR 0132	OR 0132	1186438				
2.62 x 25.07	OR 03100		1186833				
2.62 x 26.65	OR 03106		1186759			5045475	1786243
2.62 x 28.25	OR 03112		3186247	5037072			7104228
2.62 x 29.82	OR 03118		3186458				
2.62 x 31.42	OR 03125		3186244			1186930	
2.62 x 32.99	OR 03131		3186847	5029479	1186920		
2.62 x 34.60	OR 03137		3243250	1186767			
2.62 x 36.14	OR 03143		5027619				
2.62 x 39.34	OR 03156		3786183	1186184			
2.62 x 40.95	OR 03162		3243389				
2.62 x 42.52	OR 03168		3160040	1186705			
2.62 x 45.69	OR 03181		1186466				
2.62 x 47.30	OR 03187		3160044		1786313		
2.62 x 48.89	OR 03193		1186672	5055114			
2.62 x 50.47	OR 03200		3186245	5034849		1186948	
2.62 x 53.65	OR 03212		3060038		1186847		
2.62 x 58.42	OR 03231		3186455		1199075		
2.62 x 60.00	OR 03237		3243166				
2.62 x 61.60	OR 03243		3122252				
2.62 x 63.17	OR 03250		3186315				
2.62 x 64.77	OR 03256		1786203	1786153			
2.62 x 67.95	OR 03268		3186248				
2.62 x 71.12	OR 03281		1186625		1186405		
2.62 x 72.69	OR 03287		1186152				
2.62 x 75.87	OR 03300		1186237	1186779			
2.62 x 78.94			3786579				
2.62 x 88.57	OR 03350		5015751		1786124		
2.62 x 94.92	OR 03375		1186605				
2.62 x 215.57	OR 03850		3786202				

O-RING GASKETS THICKNESS 3.53 mm

3.53 mm

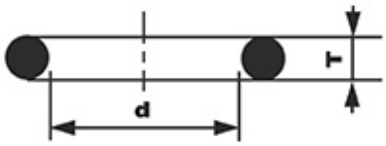

Dimensions (mm) T x d	Model (new cross-references)	Model (old cross-references)	LF Code (EPDM)	LF Code (VITON) STANDARD	LF Code (SILICONE) RED	LF Code (VITON) MIX COLOR	LF Code (SILICONE) MIX COLOR
3.53 x 9.12	OR 04036		6456047	2102713			
3.53 x 15.47	OR 04061		1186019		3786053		
3.53 x 17.04	OR 04067		3786519				
3.53 x 18.64	OR 04075	OR 0125	1186472	1186766	3186610		
3.53 x 20.22	OR 04081	OR 0126	1186238	2111463	1186009		
3.53 x 21.82	OR 04087	OR 0129	1186630	4059475			

GRIMAC

Dimensions (mm) T x d	Model (new cross-references)	Model (old cross-references)	LF Code (EPDM)	LF Code (VITON) STANDARD	LF Code (SILICONE) RED	LF Code (VITON) MIX COLOR	LF Code (SILICONE) MIX COLOR
3.53 x 23.40	OR 04093	OR 0131	3186143	5028161	1786050		
3.53 x 26.58	OR 04106	OR 0135	1186231		1786119		
3.53 x 28.17	OR 04112	OR 0136	1186480	3786008	1786018		1186869
3.53 x 29.75	OR 04118	OR 0137	3243142	1786167	1186874	1186790	1786199
3.53 x 31.34	OR 04125	OR 0138	1186506		1186010		
3.53 x 32.93	OR 04131	OR 0139	1186655	3186580	1786210	1786098	
3.53 x 34.52	OR 04137	OR 0140	3061040		1186990	1186403	1186963
3.53 x 36.10	OR 04143	OR 0141	3186338		1786118		
3.53 x 37.69	OR 04150	OR 0142	3186197	5034986	1186905		1786168
3.53 x 39.69	OR 0144	OR 0144	3186606		1786099		1186947
3.53 x 40.86	OR 04162		3067198	40C6450	5039021		
3.53 x 41.28	OR 0146	OR 0146	3186238	1186798			
3.53 x 42.86	OR 0147	OR 0147	3186184	1786117	1786140		
3.53 x 44.04	OR 04175		3186175	1786152			
3.53 x 46.04	OR 0150	OR 0150	3786181				
3.53 x 47.22	OR 04187		3186290	1186190			
3.53 x 47.63	OR 0152	OR 0152	1186087			1186931	
3.53 x 49.21	OR 0153	OR 0153	3786454	5005318	1786116		
3.53 x 50.39	OR 04200		3186601	3786459	4006406		
3.53 x 50.80	OR 0155	OR 0155	3316031		1186503	1786311	
3.53 x 53.57	OR 04212		1186643			5501390	
3.53 x 55.56	OR 0159	OR 0159	3186697	1186715			
3.53 x 56.74	OR 04225		1186799				
3.53 x 57.15	OR 0161	OR 0161	1186198	1786292			
3.53 x 58.74	OR 0162	OR 0162	1186199	1786287			
3.53 x 59.92	OR 04237		3316110				
3.53 x 60.33	OR 0164	OR 0164	1186230	1786011			
3.53 x 63.09	OR 04250		1186022				
3.53 x 63.50	OR 0167	OR 0167	3186454		1786298		
3.53 x 65.09	OR 0168	OR 0168	1186645				
3.53 x 68.26	OR 0171	OR 0171	1186763				
3.53 x 69.44	OR 04275		5022973		1786209		
3.53 x 71.44	OR 0174	OR 0174	3243160				
3.53 x 73.03	OR 0176	OR 0176	1186641		1186858	1786254	
3.53 x 75.80	OR 04300		1186748		1786110		
3.53 x 78.97	OR 04312		3186271	1186698	1786268		
3.53 x 82.14	OR 04325		1186693				
3.53 x 85.32	OR 04337		1186519				
3.53 x 88.50	OR 04350		1186873				1786261
3.53 x 91.67	OR 04362		3061007				
3.53 x 94.84	OR 04375		3061011				
3.53 x 98.02	OR 04387		3186137				
3.53 x 101.20	OR 04400		3160607	5501389	1786129		
3.53 x 107.50	OR 04425		3186235			1786214	
3.53 x 110.70	OR 04437		3061016				
3.53 x 113.90	OR 04450		3186456				
3.53 x 120.20	OR 04475		3186466		1186806		
3.53 x 132.90	OR 04525		1186941				
3.53 x 136.10	OR 04537		1186708				
3.53 x 148.80	OR 04587		3122552				
3.53 x 158.30	OR 04625		3122255				
3.53 x 164.70	OR 04650		3122344				
3.53 x 183.70	OR 04725		3061037				

GRIMAC

O-RING GASKETS THICKNESS 5.34 mm

5.34 mm

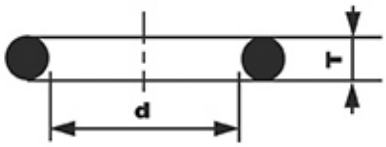

Dimensions (mm) T x d	Model (new cross-references)	Model (old cross-references)	LF Code (EPDM)	LF Code (VITON) STANDARD	LF Code (SILICONE) RED	LF Code (VITON) MIX COLOR	LF Code (SILICONE) MIX COLOR
5.34 x 34.29	OR 06135		1186220				
5.34 x 37.47	OR 06150	OR 0143	3186001			5018795	
5.34 x 40.65	OR 06162	OR 0145	5026454	1786272			
5.34 x 43.82	OR 06175	OR 0148	3186339		5039034		
5.34 x 47.00	OR 06187	OR 0151	3186013	5060790	3186313		
5.34 x 50.16	OR 06200	OR 0154	3186333		1786275		
5.34 x 53.34	OR 06212	OR 0157	1186673	3186241	1786273		5023642
5.34 x 56.52	OR 06225	OR 0160	3186014				3186314
5.34 x 59.69	OR 06237	OR 0163	1186932		5038239		
5.34 x 62.87	OR 06250	OR 0166	3186331				
5.34 x 66.04	OR 06262	OR 0169	1186505				
5.34 x 69.22	OR 06275	OR 0172	3160061				
5.34 x 72.39	OR 06287	OR 0175	3786685				
5.34 x 74.63	OR 0178	OR 0178	3186015		1786009		
5.34 x 75.57	OR 06300	OR 0179	5039882	1186456			
5.34 x 78.74	OR 06312	OR 0180	3010048				
5.34 x 79.77	OR 0181	OR 0181	5006335				
5.34 x 81.92	OR 06325	OR 0182	3243088				
5.34 x 85.09	OR 06337	OR 0183	3186335		1786246		
5.34 x 94.62	OR 06375	OR 0187	1786002				
5.34 x 100.00	OR 0189	OR 0189	1186749				
5.34 x 110.50	OR 06437	OR 0194	5010476				1186075
5.34 x 120.70	OR 0201	OR 0201	3160615				
5.34 x 139.70	OR 0215	OR 0215	5052966				

O-RING GASKETS THICKNESS 7.00 mm

7.00 mm

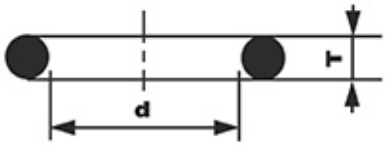

Dimensions (mm) T x d	Model (new cross-references)	Model (old cross-references)	LF Code (EPDM)	LF Code (VITON) STANDARD	LF Code (SILICONE) RED	LF Code (VITON) MIX COLOR	LF Code (SILICONE) MIX COLOR
7.00 x 135.90	OR 08537	OR 0212	5050109				
7.00 x 142.20	OR 08562	OR 0216	2104555				
7.00 x 155.60	OR 0223	OR 0223	5006513				
7.00 x 183.52	OR 08725	OR 0234	5024838				
7.00 x 204.67	OR 08950	OR 0246	5026360		5029810		
7.00 x 266.07	OR 081050	OR 0250	5034088				

GRIMAC

Dimensions (mm) T x d	Model (new cross-references)	Model (old cross-references)	LF Code (EPDM)	LF Code (VITON) STANDARD	LF Code (SILICONE) RED	LF Code (VITON) MIX COLOR	LF Code (SILICONE) MIX COLOR
7.00 x 297.80	OR 081175	OR 0255	5032360				

O-RING THICKNESS 1.78 mm

1.78 mm

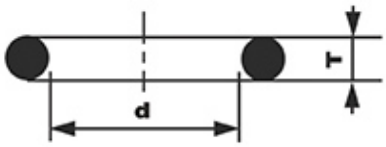

Dimensions (mm) T x d	Model (new cross-references)	Model (old cross-references)	LF Code (EPDM)	LF Code (VITON) STANDARD	LF Code (SILICONE) RED	LF Code (VITON) MIX COLOR	LF Code (SILICONE) MIX COLOR
1.78 x 1.78	OR 02007		2111723				
1.78 x 2.57	OR 02010		1186163	1186746			
1.78 x 2.90	OR 02012	OR 0101	1186365		1186846	1186842	
1.78 x 3.69	OR 02015	OR 0102	1186014	1186900	1786278	1786095	1186514
1.78 x 4.48	OR 02018	OR 0103	1186421	1186755	1186861		
1.78 x 5.28	OR 02021	OR 0104	1186362	1786088	1186903	1786144	5056235
1.78 x 6.07	OR 02025	OR 0105	3243139	1186612	1186611	1786143	1486013
1.78 x 6.75	OR 0106	OR 0106	3243009	1186435	1186864		
1.78 x 7.66	OR 02031	OR 0107	1186411	1186717	1186901	1786085	
1.78 x 8.73	OR 0108	OR 0108	1186422	1186707	1186902		
1.78 x 9.25	OR 02037	OR 0110	1186803	1186088	1786087	1786267	
1.78 x 10.82	OR 02043		1186346	1786303	5008673	1186950	
1.78 x 11.11	OR 0114	OR 0114	1186626	1186730	1186877		1786075
1.78 x 12.42	OR 02050		1186352		1186366		
1.78 x 14.00	OR 02056		1186223	1786154	1786061	5037375	
1.78 x 15.60	OR 02062		1186424	1786232	1786159	1786208	
1.78 x 17.17	OR 02068		3243069	1786271		1786165	
1.78 x 18.77	OR 02075		3186440			1186933	5008687
1.78 x 20.35	OR 02081		3243266				1186373
1.78 x 21.95	OR 02087		3243382	1786277			
1.78 x 23.52	OR 02093		1186401				
1.78 x 25.12	OR 02100		3186169				
1.78 x 26.70	OR 02106		3186343		1186863		
1.78 x 28.30	OR 02112		3186754	1186631			
1.78 x 29.87	OR 02118		5010533				
1.78 x 31.47	OR 02125		3243191	1186919	1786139		
1.78 x 33.05	OR 02131		1186003		3186317		
1.78 x 34.65	OR 02137		3243189		5060454	1186929	
1.78 x 47.35	OR 02187		7102065		3186657		
1.78 x 50.52	OR 02200		1186956				
1.78 x 60.05	OR 02237		6456037				
1.78 x 72.75	OR 02287		5059891				
1.78 x 75.92	OR 02300		1186397				
1.78 x 82.27	OR 02325		6456074				
1.78 x 88.62	OR 02350		3186232				
1.78 x 94.97	OR 02375		3122121				
1.78 x 120.37	OR 02475		3122365				
1.78 x 133.07	OR 02525		3186239				

GRIMAC

PINS GRIMAC

Photo	LF Code	Dimensions	Suitable for	Notes	For machine model
1	1324127	---	GRIMAC 1030100002-MG352	FOR BREW GROUPS - PER GRUPPI EROGAZIONE	NUVOLA - TERRY
2	1324126	---	GRIMAC 1200700002-MG055/1	FOR BREW GROUPS - PER GRUPPI EROGAZIONE	NUVOLA - TERRY
3	1324013	---	GRIMAC 1201100011-F153	FOR BREW GROUPS - PER GRUPPI EROGAZIONE	ECLISSE - TEN
4	1250513	40 mm	GRIMAC GR781	FOR BREW GROUPS - PER GRUPPI EROGAZIONE	ECLISSE - TEN
5	1324303	6x6 mm M3 H10.1 mm	GRIMAC GR753	FOR BREW GROUPS - PER GRUPPI EROGAZIONE	ECLISSE - TEN
6	1324006	5x5 mm M4 H40 mm	GRIMAC 1201100014-F162	FOR BREW GROUPS - PER GRUPPI EROGAZIONE	ECLISSE - TEN

PINS GRIMAC

Photo	LF Code	Dimensions	Suitable for	Notes	For machine model
1	1324086	---	GRIMAC 1201500029-GR355	FOR STEAM/WATER TAPS - PER RUBINETTI VAPORE/ACQUA	ZOLAII
2	1324026	---	GRIMAC GR357	FOR STEAM/WATER TAPS - PER RUBINETTI VAPORE/ACQUA	ZOLAII
3	1324301	---	GRIMAC GR739	FOR STEAM/WATER TAPS - PER RUBINETTI VAPORE/ACQUA	ECLISSE - TWENTY
4	1324300	---	GRIMAC 1201100038-GR090	FOR STEAM/WATER TAPS - PER RUBINETTI VAPORE/ACQUA	ECLISSE - TWENTY
5	1324302	---	GRIMAC 1201500027-GR093	FOR INLET TAPS - PER RUBINETTI CARICO	ECLISSE - TEN

PIPES GRIMAC

Photo	LF Code	Notes	Suitable for	For machine model
1	1449123	ø 1/4"M - ø 8 mm - 110 mm	GRIMAC 1260400012-GRC127	ECLISSE - G11
2	1449696	ø 1/4"M - 80 mm	GRIMAC 1260400008-GR224	MIA - ZOLAI - ZOLAII

GRIMAC

PRECISION COFFEE FILTERS GRIMAC

1 2 3

Photo	LF Code	Model	Suitable for	Notes
1	1460100	1 CUP - 6/8 gr - H24.5	GRIMAC	---
1	1460101	1 CUP - 7/9 gr - H26.5	GRIMAC	---
2	1460102	2 CUPS - 12/18 gr - H24.5	GRIMAC	---
2	1460103	2 CUPS - 14/20 gr - H26.5	GRIMAC	---
3	1460104	3 CUPS - 18/22 gr - H28.5	GRIMAC	---

Filtri progettati per ottenere la perfetta estrazione del caffè , acciaio Aisi 316 , certificati alimentare

PRESSURE GAUGES GRIMAC

1 2 3 4

Photo	LF Code	Scale (bar)	Dimensions A - B - C (mm)	Suitable for	For machine model
1	1245044	0÷2.5	41 - 44 - 1/8	GRIMAC 1250200057-MG157/1	MIA - NEWCIALDAVAPOR - VAPORDOUBLE
2	1245200	0÷2.5/0÷16	60 - 65 - 1/8	GRIMAC 1250200034-GRC106	ECLISSE - TEN - TWENTY
3	1245201	0÷2.5/0÷15	63 - 70 - 1/8	GRIMAC 1250200033-GR034S	G10 - G11
4	1245411	0÷2.5/0÷16	63 - 70 - 1/8	GRIMAC 1250200031-GR034	ZOLAI - ZOLAII

PRESSURE SWITCHES PARKER

1

Photo	LF Code	Model	Scale (bar)
1	1320541	PS325-1C - 3 POLES - 20A - 1/4"	0.5÷1.4

GRIMAC

PRESSURE SWITCHES SIRAI

1 2 3

Photo	LF Code	Model	Scale (bar)
1	1320531	P302/6 - 3 POLES - 30A - 1/4"	0.5÷1.4
2	1320533	P302/6	---
3	1320800	P203T01 - 2 POLES - 20A - 1/4"	0.5÷1.4
3	1320801	P203T02 - 2 POLES - 20A - 1/4"	0.9÷1.7
3	1320802	P303T01 - 3 POLES - 20A - 1/4"	0.5÷1.4
3	1320803	P303T02 - 3 POLES - 20A - 1/4"	0.9÷1.7

PROTECTIVE RUBBERPIECES

1 2 3 4 5

Photo	LF Code	For pipe ø (mm)	Suitable for
1	1186398	8	NUOVA SIMONELLI
1	5030025	10	NUOVA SIMONELLI - SANREMO
2	1187501	8	ALL BRANDS - TUTTE LE MARCHE
2	1186924	10	CASADIO - CIMBALI - FAEMA - FIAMMA
3	1186180	10	ALL BRANDS - TUTTE LE MARCHE
4	1549009	8	ASTORIA/CMA - MCE - WEGA
5	1549011	10	CIMBALI - FAEMA

PROTECTIVE RUBBERPIECES

1 2 3 4 5 6

Photo	LF Code	For pipe ø (mm)	Suitable for
1	1186339	8	ALL BRANDS - TUTTE LE MARCHE
1	1186080	10	ALL BRANDS - TUTTE LE MARCHE
2	1549020	10	GAGGIA
3	1187001	10	SPAZIALE
4	1449172	8	ASTORIA/CMA - ELEKTRA - MARZOCCO - WEGA
5	1649001	10	FRACINO
6	1649002	8	CARIMALI

GRIMAC

PTFE FLAT GASKETS

LF Code	Dimensions	Suitable for	Notes
5500622	ø 6x1.8x2 mm	SAECO	FOR STEAM/WATER TAPS - PER RUBINETTI VAPORE/ACQUA
1186718	ø 7x5x1 mm	SPAZIALE	FOR HIDRAULIC SYSTEM - PER IMPIANTO IDRAULICO
1186974	ø 8.5x4.5x1.5 mm	CIMBALI - CASADIO	FOR MANOMETER - PER MANOMETRO
1786291	ø 9.5x6x2 mm	VIBIEMME	FOR BREW GROUPS - PER GRUPPI EROGAZIONE
1186099	ø 10x6x1 mm	BEZZERA - BIANCHI - BRASILIA	FOR BREW GROUPS - PER GRUPPI EROGAZIONE
1186099	ø 10x6x1 mm	PAVONI - RENEKA	FOR BREW GROUPS - PER GRUPPI EROGAZIONE
1186434	ø 10x7x0.5 mm	FAEMA	FOR BREW GROUPS - PER GRUPPI EROGAZIONE
1186359	ø 11.4x8x3 mm	CIMBALI	FOR INLET TAPS - PER RUBINETTI CARICO
1186809	ø 12x9x1 mm	FIAMMA - RANCILIO	FOR BREW GROUPS - PER GRUPPI EROGAZIONE
1186121	ø 12x10x0.5 mm	FAEMA	FOR STEAM/WATER TAPS - PER RUBINETTI VAPORE/ACQUA
1186065	ø 12x10x1 mm	BRASILIA - FIORENZATO - VIBIEMME	FOR STEAM/WATER TAPS - PER RUBINETTI VAPORE/ACQUA
1186908	ø 12x10x2 mm	SAECO	---
1186581	ø 13x3x4 mm	AZKOYEN	---
1186661	ø 13x15.5x1 mm	BRASILIA	FOR STEAM/WATER TAPS - PER RUBINETTI VAPORE/ACQUA
1186945	ø 14x10x1.5 mm	CIMBALI	FOR BOOSTER PUMPS - PER POMPE VOLUMETRICHE
1186794	ø 14.6x12x3 mm	PROMAC	FOR STEAM/WATER TAPS - PER RUBINETTI VAPORE/ACQUA
1186189	ø 15x11x2 mm	ASTORIA/CMA	FOR BREW GROUPS - PER GRUPPI EROGAZIONE
3186273	ø 16.5x12.5x1.5 mm	---	---
1186240	ø 17x12x0.5 mm	FAEMA	FOR BREW GROUPS - PER GRUPPI EROGAZIONE
1186468	ø 17x12x1.5 mm	PAVONI - GAGGIA	---
1186982	ø 17x13x2 mm	GRIMAC	FOR BOILER SAFETY VALVES - PER VALVOLA BOILER
1186982	ø 17x13x2 mm	PAVONI	FOR BREW GROUPS - PER GRUPPI EROGAZIONE
1186982	ø 17x13x2 mm	VIBIEMME	FOR LEVEL CAPS - PER TAPPO LIVELLO
1186079	ø 17x13x3 mm	BRASILIA	FOR BREW GROUPS - PER GRUPPI EROGAZIONE
1186119	ø 17.3x12x2 mm	CONTI	FOR BREW GROUPS - PER GRUPPI EROGAZIONE
1186030	ø 18x3.5x1 mm	EXPOBAR	FOR BREW GROUPS - PER GRUPPI EROGAZIONE
1186443	ø 18x9x0.5 mm	RANCILIO - PROMAC	FOR STEAM/WATER TAPS - PER RUBINETTI VAPORE/ACQUA
1186404	ø 18x13x2 mm	MANY BRANDS - MOLTI MARCHI	SEVERAL APPLICATIONS - MOLTE APPLICAZIONI
1786301	ø 18x13.5x2 mm	FIAMMA	---
1786166	ø 18x14x1.5 mm	CIMBALI - CASADIO	FOR BOILER SAFETY VALVES - PER VALVOLA BOILER
1786040	ø 18.2x13x2.5 mm	EXPOBAR	---
1786251	ø 19x14.5x2 mm	CARIMALI	FOR BREW GROUPS - PER GRUPPI EROGAZIONE
1786001	ø 20x13x3 mm	---	---
1186959	ø 20x15x1 mm	CIMBALI - FAEMA	---
1186594	ø 20x17x2 mm	BRASILIA	FOR INLET TAPS - PER RUBINETTI CARICO
1186594	ø 20x17x2 mm	ORCHESTRALE	FOR STEAM/WATER TAPS - PER RUBINETTI VAPORE/ACQUA
1186594	ø 20x17x2 mm	SANREMO	FOR BREW GROUPS - PER GRUPPI EROGAZIONE
1186201	ø 21x16.8x2 mm	MANY BRANDS - MOLTI MARCHI	SEVERAL APPLICATIONS - MOLTE APPLICAZIONI
3786036	ø 22x9x1 mm	---	---
1186326	ø 22x16x2 mm	MANY BRANDS - MOLTI MARCHI	SEVERAL APPLICATIONS - MOLTE APPLICAZIONI
1186957	ø 22x17x1.5 mm	CIMBALI - CASADIO	FOR STEAM/WATER TAPS - PER RUBINETTI VAPORE/ACQUA
1186314	ø 22x17x2 mm	MANY BRANDS - MOLTI MARCHI	SEVERAL APPLICATIONS - MOLTE APPLICAZIONI
3186609	ø 24x13x1.5 mm	---	---
1186323	ø 24x18x2 mm	MANY BRANDS - MOLTI MARCHI	SEVERAL APPLICATIONS - MOLTE APPLICAZIONI
1186731	ø 24x19x2 mm	FIORENZATO - MARZOCCO - VIBIEMME	FOR STEAM/WATER TAPS - PER RUBINETTI VAPORE/ACQUA
1786250	ø 24x20x1.5 mm	CARIMALI	FOR BREW GROUPS - PER GRUPPI EROGAZIONE
3186278	ø 25x16.5x0.5 mm	---	---

GRIMAC

LF Code	Dimensions	Suitable for	Notes
1186969	ø 25x21x1.5 mm	CIMBALI - CASADIO	FOR FILTER - PER FILTRO
1786283	ø 25.5x21x5 mm	VIBIEMME	FOR BREW GROUPS - PER GRUPPI EROGAZIONE
3786502	ø 25.7x21.2x5 mm	EXPOBAR	---
1186516	ø 26x17x2 mm	SPAZIALE	FOR HEATING ELEMENTS - PER RESISTENZE
1186118	ø 26x19x2 mm	FIORENZATO	FOR STEAM/WATER TAPS - PER RUBINETTI VAPORE/ACQUA
1186117	ø 26x21x2 mm	MANY BRANDS - MOLTI MARCHI	SEVERAL APPLICATIONS - MOLTE APPLICAZIONI
1186537	ø 26x22x2 mm	EXPOBAR	FOR BREW GROUPS - PER GRUPPI EROGAZIONE
1186537	ø 26x22x2 mm	PAVONI	FOR BREW GROUPS - PER GRUPPI EROGAZIONE
1186127	ø 27x20x0.5 mm	FAEMA	FOR INLET TAPS - PER RUBINETTI CARICO
1186248	ø 27x20x1 mm	CASADIO	FOR BREW GROUPS - PER GRUPPI EROGAZIONE
1186248	ø 27x20x1 mm	FAEMA	FOR STEAM/WATER TAPS - PER RUBINETTI VAPORE/ACQUA
1186290	ø 27x21x2 mm	SAN MARCO	FOR BREW GROUPS - PER GRUPPI EROGAZIONE
1186281	ø 28x23x2 mm	PAVONI	FOR STEAM/WATER TAPS - PER RUBINETTI VAPORE/ACQUA
1186281	ø 28x23x2 mm	SAN MARCO	FOR BREW GROUPS - PER GRUPPI EROGAZIONE
1186770	ø 33x28x4 mm	ASTORIA/CMA	FOR BREW GROUPS - PER GRUPPI EROGAZIONE
1186361	ø 34x27x2 mm	SAN MARCO	FOR BREW GROUPS - PER GRUPPI EROGAZIONE
3186665	ø 35x21x2 mm	---	---
1186328	ø 35x30x2 mm	MANY BRANDS - MOLTI MARCHI	SEVERAL APPLICATIONS - MOLTE APPLICAZIONI
1186307	ø 36x30x2 mm	MANY BRANDS - MOLTI MARCHI	SEVERAL APPLICATIONS - MOLTE APPLICAZIONI
3786512	ø 40x34x3 mm	CONTI	---
1186993	ø 42x33x3 mm	BEZZERA	FOR HEATING ELEMENTS - PER RESISTENZE
1186243	ø 42x34x0.5 mm	FAEMA	FOR BREW GROUPS - PER GRUPPI EROGAZIONE
1186608	ø 50x40x2 mm	ASTORIA/CMA - SAN MARCO - SPAZIALE	FOR HEATING ELEMENTS - PER RESISTENZE
1186994	ø 50x40x5.5 mm	SAN MARCO	FOR BREW GROUPS - PER GRUPPI EROGAZIONE
1186800	ø 50x44x4 mm	FIORENZATO - VIBIEMME	FOR BREW GROUPS - PER GRUPPI EROGAZIONE
1186979	ø 52x40x2 mm	EXPOBAR	FOR HEATING ELEMENTS - PER RESISTENZE
1186979	ø 52x40x2 mm	QUICK MILL	FOR HEATING ELEMENTS - PER RESISTENZE
1186623	ø 53x43x3 mm	MANY BRANDS - MOLTI MARCHI	FOR HEATING ELEMENTS - PER RESISTENZE
3743110	ø 57x41x2 mm	---	---
1186179	ø 57x43x3 mm	MANY BRANDS - MOLTI MARCHI	FOR HEATING ELEMENTS - PER RESISTENZE
1186194	ø 58x43x2 mm	ASTORIA/CMA - ORCHESTRALE	FOR HEATING ELEMENTS - PER RESISTENZE
1186609	ø 58x51x2 mm	CIMBALI	FOR HEATING ELEMENTS - PER RESISTENZE
1186639	ø 62x51x2 mm	SPAZIALE	FOR HEATING ELEMENTS - PER RESISTENZE
1186455	ø 65x47x1.5 mm	RANCILIO - PROMAC	FOR HEATING ELEMENTS - PER RESISTENZE
1186409	ø 68x55x3 mm	NUOVA SIMONELLI	FOR HEATING ELEMENTS - PER RESISTENZE
1186188	ø 72x61x2 mm	ASTORIA/CMA	FOR HEAT EXCHANGES - PER SCAMBIATORE
1186297	ø 73x61x3 mm	---	---
1186155	ø 76x68.4x3 mm	CONTI	FOR HEATING ELEMENTS - PER RESISTENZE
1786213	ø 85x70x2 mm	---	---

ROTARY VANE PUMPS PROCON

1

2

3

4

5

Photo	LF Code	Flow rate (l/h)	Connections (ø)	Suitable for
1	1330012	200	3/8" NPT	ALL BRANDS - TUTTE LE MARCHE
1	1330024	100	3/8" NPT	PAVONI
1	1330019	100	3/8" NPT	CIMBALI - FAEMA - SPAZIALE
2	1330016	200	3/8" NPT	ALL BRANDS - TUTTE LE MARCHE
3	1330033	180	3/8"	CASADIO - CIMBALI - FAEMA
4	1330011	200	3/8" NPT	FAEMA
5	1330017	150	3/8"	CASADIO - CIMBALI - FAEMA

GRIMAC

ROTARY VANE PUMPS ROTOFLOW

1

2

3

4

5

6

Photo	LF Code	Flow rate (l/h)	Connections (ø)	Suitable for
1	1330021	50	3/8"	ALL BRANDS - TUTTE LE MARCHE
1	1330034	70	3/8"	ALL BRANDS - TUTTE LE MARCHE
1	1330008	150	3/8"	ALL BRANDS - TUTTE LE MARCHE
1	1330026	200	3/8"	ALL BRANDS - TUTTE LE MARCHE
1	1330001	100	3/8" NPT	ALL BRANDS - TUTTE LE MARCHE
1	1330029	150	3/8" NPT	ALL BRANDS - TUTTE LE MARCHE
1	1330002	200	3/8" NPT	ALL BRANDS - TUTTE LE MARCHE
1	1330101	100	3/8" NPT ECO BRASS	ALL BRANDS - TUTTE LE MARCHE
1	1330102	200	3/8" NPT ECO BRASS	ALL BRANDS - TUTTE LE MARCHE
1	1330030	200	3/8"	RANCILIO 10705960
2	1330025	70	3/8"	ALL BRANDS - TUTTE LE MARCHE
2	1330004	100	3/8" NPT	ALL BRANDS - TUTTE LE MARCHE
3	1330022	50	3/8"	ALL BRANDS - TUTTE LE MARCHE
3	1330005	100	3/8"	ALL BRANDS - TUTTE LE MARCHE
3	1330122	50	3/8" ECO BRASS	ALL BRANDS - TUTTE LE MARCHE
4	1330031	150	3/8"	CASADIO - CIMBALI - FAEMA
5	1330003	200	3/8" NPT	FAEMA - GRIMAC
6	1330006	200	3/8"	UNIC

SELECTOR SWITCHES GRIMAC

1

2

Photo	LF Code	Positions number	Contact capacity	Suitable for	For machine model
1	1357200	0-2	16A 600V	GRIMAC 1160100006 - GR273	ECLISSE - G10 - TEN - TWENTY
2	1057020	0-2	25A 600V	GRIMAC A2100316	G11

GRIMAC

SHOWER HOLDER SPRAYER GRIMAC

1 2

Photo	LF Code	Dimensions (external-height-hole)	Suitable for	For machine model
1	1086020	ø 55 mm - H 45 mm	GRIMAC 1210800002 - MG126N	NEWCIALDAVAPOR - NUVOLA - OPALE - TERRY
2	1086595	ø 58.5 mm - H 7.5 mm - ø 6.5 mm	GRIMAC A2200236	G11

SHOWER SCREENS GRIMAC

1 2 3 4 5

Photo	LF Code	Dimensions	Suitable for	For machine model
1	1081007	ø 51.5 mm	GRIMAC A2200235	G11
2	1081016	ø 60.0 mm	GRIMAC 1070100007-GR761	ECLISSE - G10 - MIA - TEN - TWENTY - ZOLAI - ZOLAII
3	1081116	ø 60.0 mm	GRIMAC 1070100007-GR761	ECLISSE - G10 - MIA - TEN - TWENTY - ZOLAI - ZOLAII
4	1081216	ø 60.0 mm	GRIMAC 1070100007-GR761	ECLISSE - G10 - MIA - TEN - TWENTY - ZOLAI - ZOLAII
5	1081516	ø 60.0 mm	GRIMAC 1070100007-GR761	ECLISSE - G10 - MIA - TEN - TWENTY - ZOLAI - ZOLAII

SPACERS

1 2 3

Photo	LF Code	Dimensions (mm)	Material
1	1190101	ø 64x53x0.7	PAPER/CARTA
1	1190021	ø 66x58x0.8	PAPER/CARTA
1	1190006	ø 69x57x0.8	PAPER/CARTA
1	1190005	ø 70x57x0.5	PAPER/CARTA
1	1190051	ø 70x57x0.8	PAPER/CARTA
1	1190011	ø 72x58x0.8	PAPER/CARTA
1	1190001	ø 73x59x0.8	PAPER/CARTA
2	1190007	ø 64x53x1.0	EPDM
2	1190003	ø 70x57x1.0	EPDM
2	1190002	ø 73x59x1.0	EPDM
3	1190004	ø 71x58x0.6	VITON

GRIMAC

SPECIFIC COUPLINGS GRIMAC

1 2 3 4 5

Photo	LF Code	Dimensions	Notes	Suitable for	For machine model
1	5500019	ø 1/2"M-1/2"M-1/4"F	FOR BOILERS - PER CALDAIE	GRIMAC 1230100014-W591	MIA
2	1349014	ø 1/2"M-1/2"M	FOR BOILERS - PER CALDAIE	GRIMAC GRC603	ECLISSE - TEN - TWENTY
2	1349278	ø 1/2"M-1/2"M-1/4"F	FOR BOILERS - PER CALDAIE	GRIMAC GRC604	ECLISSE - TEN - TWENTY
3	1349182	ø 1/8"M-1/8"M	FOR HYDRAULIC - PER IDRAULICA	GRIMAC 1230200008-MG304	AMBRA - MIA - NUVOLA - OPALE
3	1349250	ø 1/8"M-1/8"-ø 6 mm	FOR HYDRAULIC - PER IDRAULICA	GRIMAC 1230200008-MG304	AMBRA - MIA - NUVOLA - OPALE
3	1349251	ø 1/8"M-1/8"-ø 6 mm	FOR HYDRAULIC - PER IDRAULICA	GRIMAC 1230200009-MG328	AMBRA - NEWCIALDAVAPOR
4	1349705	ø 3/8"M-3/8"M	FOR HYDRAULIC - PER IDRAULICA	GRIMAC 1260500004-GR095/1	ECLISSE - TWENTY - ZOLAI
5	1349100	ø 3/8"NPT-3/8"M	FOR PUMPS - PER POMPE	GRIMAC A1300008	G11

SPECIFIC SPOUTS - VARIOUS BRANDS

1 2 3 4 5

Photo	LF Code	Connection (ø)
1	1022032	3/8
2	1022059	3/8
3	1022505	3/8
4	1022550	3/8
5	1022099	3/8

SPOUTS FOR COFFEE PODS MACHINES

1 2

Photo	LF Code	Dimensions (mm)
1	1022069	ø 8x60
2	1022070	ø 8x54

GRIMAC

SPRINGS GRIMAC

Photo	LF Code	Dimensions	Notes	Suitable for	For machine model
1	1250286	ø 7.5x24 mm	FOR MUSHROOM VALVE - PER VALVOLA A FUNGO	GRIMAC 1180100001-MG015/1	OPALE - TERRY
2	1250202	ø 8x30 mm	FOR STEAM/WATER TAPS - PER RUBINETTI VAPORE/ACQUA	GRIMAC GR359	ZOLAII
3	1250071	ø 8x32 mm	FOR INLET TAPS - PER RUBINETTI CARICO	GRIMAC 1180100081-FS214	G10 - MIA
4	1250547	ø 11.5x16 mm	FOR WATER/STEAM PIPES - PER TUBI ACQUA/VAPORE	GRIMAC 1180100012-AS035	ECLISSE - MIA
5	1250365	ø 11.5x30 mm	FOR STEAM/WATER TAPS - PER RUBINETTI VAPORE/ACQUA	GRIMAC 1180100097-GR362	ZOLAII
6	1250203	ø 11x30 mm	FOR STEAM/WATER TAPS - PER RUBINETTI VAPORE/ACQUA	GRIMAC 1180100035-C295	G10

SPRINGS GRIMAC

Photo	LF Code	Dimensions	Notes	Suitable for	For machine model
1	1250157	ø 12.5x30 mm	FOR STEAM/WATER TAPS - PER RUBINETTI VAPORE/ACQUA	GRIMAC GR742	ECLISSE - TEN
2	1250151	ø 12x15 mm	FOR STEAM/WATER TAPS - PER RUBINETTI VAPORE/ACQUA	GRIMAC A2200001	G11
3	1250536	ø 13x42 mm	FOR BREW GROUPS - PER GRUPPI EROGAZIONE	GRIMAC 1180100053-GR780	ECLISSE - TEN
4	1250656	ø 14.5x35 mm	FOR BREW GROUPS - PER GRUPPI EROGAZIONE	GRIMAC 1180100054-GR760	ECLISSE - TEN
5	1250652	ø 15x18 mm	FOR STEAM/WATER TAPS - PER RUBINETTI VAPORE/ACQUA	GRIMAC GR799	ECLISSE - TEN
6	1250516	ø 15x28 mm	FOR BREW GROUPS - PER GRUPPI EROGAZIONE	GRIMAC 1180100193-GR788	ECLISSE - TWENTY - ZOLAI - ZOLAII

STEAM-WATER PIPES GRIMAC

Photo	LF Code	Notes	Suitable for	For machine model
1	1449698	---	GRIMAC 1260200031-GR211	ECLISSE - G10 - TWENTY - ZOLAI - ZOLAII
2	1449393	---	GRIMAC A2000090	G11
3	1449068	---	GRIMAC 1260200034-GR348	ZOLAII
4	1449176	S.STEEL ø 8 mm - 160 mm	GRIMAC 2260200036-MG569R	NUVOLA
5	1449394	---	GRIMAC A2200044	G11

GRIMAC

STEAM-WATER PIPES GRIMAC

Photo	LF Code	Notes	Suitable for	For machine model
1	1449012	---	GRIMAC	G11
2	1549023	110 mm	GRIMAC 1310900002-GR167X	MIA - NEW CIALDAVAPOR
3	1449697	---	GRIMAC 1260100019-GR271	ZOLAII
4	1449699	---	GRIMAC 1260100017-GR167	ECLISSE - G10 - TWENTY - ZOLAI - ZOLAII
5	1449332	---	GRIMAC A2200012	G11 - MIA - NEW CIALDAVAPOR

STEAM-WATER TAPS GRIMAC

Photo	LF Code	Suitable for	For machine model
1	1348703	GRIMAC 1200400038-GR211C	ECLISSE - TEN - TWENTY - ZOLAI - ZOLAII
2	1348707	GRIMAC 1200400082-GR118M	ECLISSE - TEN - TWENTY - ZOLAI - ZOLAII
3	1348842	GRIMAC 1200400045-GR329	ZOLAII
4	1348211	GRIMAC A2200021	G11
5	1348122	GRIMAC 2510500032	G10 - SELENITE DOUBLE
6	1349521	GRIMAC A2200036	G11

STEAM-WATER TAPS GRIMAC

Photo	LF Code	Suitable for	For machine model
1	1186122	GRIMAC GR741	ECLISSE - TEN - TWENTY - ZOLAI - ZOLAII
2	1348213	GRIMAC A2200004	G11
3	1186322	GRIMAC 1201100018-GR800	ECLISSE - TEN - TWENTY - ZOLAI - ZOLAII
4	1186288	GRIMAC 1201200008-C294	G10 - SELENITE DOUBLE
5	1186334	GRIMAC 1300900111-W604	ECLISSE - TEN - TWENTY - ZOLAI - ZOLAII
6	1186670	GRIMAC A2200003	G11

GRIMAC

SWITCHES GRIMAC

1 2 3 4 5 6

Photo	LF Code	Notes	Suitable for	For machine model
1	3319296	SWITCH - INTERRUTTORE / 16A 250V	GRIMAC A2100093	G11
2	3319294	SWITCH - INTERRUTTORE / 16A 250V	GRIMAC 1160200035-GR113	MIA - NEWCIALDAVAPOR - TEN - TWENTY - VAPORDOUBLE
3	1319809	SWITCH - INTERRUTTORE / 16A 250V	GRIMAC 1160200079-MG073	G10 - MIA - NEWCIALDAVAPOR - TWENTY - ZOLAI
4	1319806	SWITCH - INTERRUTTORE / 16A 250V	GRIMAC 1160200037-GR121	MIA - NEWCIALDAVAPOR
5	1319392	SWITCH - INTERRUTTORE / 10A 250V	GRIMAC 1160200091	AMBRA
6	1319463	PUSH BUTTON - PULSANTE / 16A 250V	GRIMAC A2100041	G11

SWITCHES GRIMAC

1 2 3 4 5 6

Photo	LF Code	Notes	Suitable for	For machine model
1	1319393	SWITCH - INTERRUTTORE / 10A 250V	GRIMAC 1160200104	AMBRA - OPALE
2	1319005	SWITCH - INTERRUTTORE / 16A 250V	GRIMAC 1160200057-MG544	DADAVAPORDOUBLE - MAXI - SWEET
3	3319921	SWITCH - INTERRUTTORE / 16A 250V	GRIMAC 1160200059-MG545	DADAVAPORDOUBLE
4	1319391	SWITCH - INTERRUTTORE / 16A 250V	GRIMAC 2160200004-MG717	NUVOLA - TERRY
5	1319394	PUSH BUTTON - PULSANTE / 10A 250V	GRIMAC 2160200002-MG715	NUVOLA - TERRY
6	1319395	SWITCH - INTERRUTTORE / 10A 250V	GRIMAC 2160200003-MG716	NUVOLA - TERRY

UNIVERSAL CONTACT THERMOSTATS

1 2 3 4 5 6

Photo	LF Code	Temperature °C
1	1443017	85
1	1444506	90
1	1443010	93
1	1444003	95
1	1443005	98
1	1443011	100
1	1443072	104
1	1443400	107
1	1443071	110

GRIMAC

Photo	LF Code	Temperature °C
1	3443081	125
1	1443401	135
1	1443004	145
2	1443070	135
2	1444206	145
2	1443002	165
3	1443079	95
3	3443026	110
3	5027936	125
3	1443066	130
3	1444521	155
3	1443034	200
4	5027937	170
4	1443012	180
5	1443055	125
5	5035435	140
5	1443063	143
6	1443030	---

UNIVERSAL FILTER HOLDER KNOBS

Photo	LF Code	Connection	Suitable for
1	1241505	M10	ALL BRANDS - TUTTE LE MARCHE
1	1241504	M12	ALL BRANDS - TUTTE LE MARCHE
2	1241269	M10	ALL BRANDS - TUTTE LE MARCHE
2	1241169	M12	ALL BRANDS - TUTTE LE MARCHE
3	1241502	M10	ALL BRANDS - TUTTE LE MARCHE
3	1241501	M12	ALL BRANDS - TUTTE LE MARCHE

UNIVERSAL FILTER HOLDER KNOBS

Photo	LF Code	Connection	Suitable for
1	5051751	M10	ALL BRANDS - TUTTE LE MARCHE
1	5051102	M12	ALL BRANDS - TUTTE LE MARCHE
2	5054506	M10	ALL BRANDS - TUTTE LE MARCHE
2	5054505	M12	ALL BRANDS - TUTTE LE MARCHE

GRIMAC

UNIVERSAL FILTER HOLDER KNOBS

1 2

Photo	LF Code	Connection	Suitable for
1	1141006	M10	ALL BRANDS - TUTTE LE MARCHE
1	1141007	M12	ALL BRANDS - TUTTE LE MARCHE
2	1141004	M10	ALL BRANDS - TUTTE LE MARCHE
2	1141003	M12	ALL BRANDS - TUTTE LE MARCHE

VARIOUS CAPPUCCINATORE

1 2 3 4 5 6

Photo	LF Code	Suitable for
1	1079016	BIANCHI - SAN MARCO
2	1079030	ASTORIA/CMA - MCE - ORCHESTRALE
3	1079023	ASTORIA/CMA - CARIMALI - NUOVA SIMONELLI - WEGA
4	1079009	SAECO
5	1079010	SAECO
6	5501292	PAVONI

VENT VALVES

1 2 3

Photo	LF Code	Technical notes	Suitable for
1	1523537	ø 1/4"M VITON	ALL BRANDS - TUTTE LE MARCHE
2	1523534	ø 1/4"M PTFE AND VITON	ALL BRANDS - TUTTE LE MARCHE
3	1523538	ø 1/4"M	ALL BRANDS - TUTTE LE MARCHE

GRIMAC

VITON FLAT GASKETS

1 2 3 4 5

Photo	LF Code	Dimensions	Suitable for	Notes
1	1186927	ø 12x4x4 mm	CASADIO 400274020	FOR STEAM/WATER TAPS - PER RUBINETTI VAPORE/ACQUA
1	1186927	ø 12x4x4 mm	CIMBALI 400-274-020	FOR STEAM/WATER TAPS - PER RUBINETTI VAPORE/ACQUA
1	1186822	ø 13x4x4 mm	FAEMA	FOR STEAM/WATER TAPS - PER RUBINETTI VAPORE/ACQUA
1	1186822	ø 13x4x4 mm	RANCILIO 36302002	FOR BREW GROUPS - PER GRUPPI EROGAZIONE
1	1186822	ø 13x4x4 mm	WEGA WY27421026	FOR BREW GROUPS - PER GRUPPI EROGAZIONE
1	5053833	ø 13x4x4 mm NSF	FAEMA 402205000	FOR STEAM/WATER TAPS - PER RUBINETTI VAPORE/ACQUA
2	1186756	ø 15.5x7.5x4 mm	FAEMA	FOR BREW GROUPS - PER GRUPPI EROGAZIONE
2	1186756	ø 15.5x7.5x4 mm	GRIMAC 1110100044-F008	FOR STEAM/WATER TAPS - PER RUBINETTI VAPORE/ACQUA
2	1186756	ø 15.5x7.5x4 mm	ISOMAC ISRONTM155754	FOR BREW GROUPS - PER GRUPPI EROGAZIONE
3	1186029	ø 15x5.5x3 mm	EXPOBAR 50030000	FOR BREW GROUPS - PER GRUPPI EROGAZIONE
4	1186983	ø 15x7x3 mm	GAGGIA WGA4001092000	FOR INLET TAPS - PER RUBINETTI CARICO
4	1186983	ø 15x7x3 mm	PAVONI 362003	FOR STEAM/WATER TAPS - PER RUBINETTI VAPORE/ACQUA
4	1186983	ø 15x7x3 mm	SAECO WGA4001092000	FOR INLET TAPS - PER RUBINETTI CARICO
5	1186938	ø 20.5x15x2 mm	ELEKTRA 00409035	FOR STEAM/WATER TAPS - PER RUBINETTI VAPORE/ACQUA

VOLUMETRIC FLOWMETERS GICAR

1 1/4 2 1/8 3 4

Photo	LF Code	Model	Suitable for	For machine model
1	1455067	9.0.55.02G / ø 1/4"FF / ø 1.15 mm	ASTORIA/CMA 18126	ARGENTA - BRAVA - DIVINA - DORA - GLORIA - GLORIA R12
1	1455067	9.0.55.02G / ø 1/4"FF / ø 1.15 mm	BEZZERA 7431001	B2000 - B2006 - B2009 COMPACT - B2013 - B3000 - B4000
1	1455067	9.0.55.02G / ø 1/4"FF / ø 1.15 mm	BFC 5032012	CLASSICA - DELUX - GALILEO - GRANDOGE - IMOLA - JUNIOR
1	1455067	9.0.55.02G / ø 1/4"FF / ø 1.15 mm	BRUGNETTI-AURORA 95.01205	---
1	1455005	9.0.78.02G / ø 1/4"FF / ø 1.15 mm	CONTI 403466V	SK2
1	1455067	9.0.55.02G / ø 1/4"FF / ø 1.15 mm	EXPOBAR 60100045	ELEN - EXPRESSO - G10 - MARKUS - MARKUS SILVER
1	1455067	9.0.55.02G / ø 1/4"FF / ø 1.15 mm	FIORENZATO CS A1500026	BRICOLETTA - DUCALE - FENICE - LIDO - VENEZIA
1	1455067	9.0.55.02G / ø 1/4"FF / ø 1.15 mm	FUTURMAT 08307500	ARIETE - F3 - RIMINI
1	1455060	9.0.93.02G / ø 1/4"FF / ø 1.15 mm	GAGGIA 11013052	DECO - GD - GE - XD - XE
1	1455067	9.0.55.02G / ø 1/4"FF / ø 1.15 mm	GRIMAC 1160900001-GR102	MIA - NEW CIALDA VAPOR - SELENITE DOUBLE - TWENTY
1	1455067	9.0.55.02G / ø 1/4"FF / ø 1.15 mm	MCE 18126	START
1	1455067	9.0.55.02G / ø 1/4"FF / ø 1.15 mm	NUOVA SIMONELLI 04900027	APPIA - APPIA COMPACT - AURELIA - AURELIAII - MACDIGIT
1	1455067	9.0.55.02G / ø 1/4"FF / ø 1.15 mm	ORCHESTRALE D18126	ETNICA - PHONICA
1	1455067	9.0.55.02G / ø 1/4"FF / ø 1.15 mm	RENEKA 9008954	LC - LIFE - PRESTIGE - VIVA
1	1455067	9.0.55.02G / ø 1/4"FF / ø 1.15 mm	ROYAL 5032012	DIADEMA - SYNCHRO
1	1455060	9.0.93.02G / ø 1/4"FF / ø 1.15 mm	SAECO 11013052	AROMA
1	1455067	9.0.55.02G / ø 1/4"FF / ø 1.15 mm	SAN MARCO 108192	NEW 105 - 100 - 105 - 85 - 95
1	1455067	9.0.55.02G / ø 1/4"FF / ø 1.15 mm	SANREMO 10112131A	MILANO LX
1	1455067	9.0.55.02G / ø 1/4"FF / ø 1.15 mm	SCALA C-0215	BUTTERFLY - CARMEN - EROICA
1	1455067	9.0.55.02G / ø 1/4"FF / ø 1.15 mm	VIBIEMME ELETCONTVOLOT	CHIMAERA - CUBO - DOMOBARSUPER - DOSAPLUS - EVOLUTION

GRIMAC

Photo	LF Code	Model	Suitable for	For machine model
1	1455067	9.0.55.02G / ø 1/4"FF / ø 1.15 mm	VICTORIA ARDUINO 04900027	ADONIS - VENUS CENTURY
1	1455067	9.0.55.02G / ø 1/4"FF / ø 1.15 mm	WEGA WY18126	ATLAS - ATLAS 10 - COLOSSEUM - COMBI NOVA - CONCEPT
2	1455068	9.0.55.50G / ø 1/8"FF / ø 1.15 mm	BRASILIA 16054.2.00.08	ROMA
2	1455068	9.0.55.50G / ø 1/8"FF / ø 1.15 mm	CIMBALI 534-391-020	M20 - M21 JUNIOR - M22 - M27 - M27 START - M28 - M29
2	1455068	9.0.55.50G / ø 1/8"FF / ø 1.15 mm	FAEMA 534391020	E98 COMPACT
2	1455068	9.0.55.50G / ø 1/8"FF / ø 1.15 mm	FIAMMA RST 5.0.000.1012	ATLANTIC - MARINA - PRESTIGE
2	1455068	9.0.55.50G / ø 1/8"FF / ø 1.15 mm	PAVONI 438020	---
2	1455068	9.0.55.50G / ø 1/8"FF / ø 1.15 mm	SANREMO 10112290	AMALFI - CAPRI - PISA - TORINO - VERONA - ZOE
3	1455026	9.0.54.05G / ø 1/4"FF / ø 1.15 mm	FRACINO FC92	BAMBINO
3	1455026	9.0.54.05G / ø 1/4"FF / ø 1.15 mm	MARZOCCO LAD070	FB70 - FB80 - GB5 - GS3 - LINEA - MISTRAL
3	1455352	9.0.78.00G / ø 1/4"FF / ø 1.15 mm	PROMAC 34070050	CLUB - COMPACT - GREEN
3	1455352	9.0.78.00G / ø 1/4"FF / ø 1.15 mm	RANCILIO 34070050	CLASSE10 - CLASSE9 - EPOCA
4	1455001	9.0.69.03G / ø 1/4"FF / ø 1.15 mm	SPAZIALE 02498	NEW - RAPID - S1 - S2 - S3 - S40 - S5 - S8

VOLUMETRIC FLOWMETERS GICAR ACCESSORIES

1 2 3 4 5

Photo	LF Code	Model	Notes
1	3455333	9.0.16.50G	LED
2	5052706	9.0.15.51G	NO LED
3	1455032	6.9.23.05G	---
4	1186631	---	---
5	1455033	8.6.17.14	---

WASHERS UNI ISO

LF Code	Dimensions	Suitable for	Notes
3528238	ø 9x4x0.8 mm UNI 6592	GAGGIA S401004	FOR BREW GROUPS - PER GRUPPI EROGAZIONE
3528238	ø 9x4x0.8 mm UNI 6592	GRIMAC GR356	G105 - G106
3528238	ø 9x4x0.8 mm UNI 6592	PAVONI 401004	EUROPICCOLA - PROFESSIONAL - ROMANTICA - STRADIVARI
1528117	ø 12x4x1 mm UNI 6593	GRIMAC 1300900128	SEVERAL APPLICATIONS - MOLTE APPLICAZIONI
1186192	ø 10x5x1 mm UNI 6592	SPAZIALE 00246	FOR BREW GROUPS - PER GRUPPI EROGAZIONE
1186315	ø 15x5x1.2 mm UNI 6593	CIMBALI 590-733-000	FOR LEVEL - PER LIVELLO
3528010	ø 12x6x1.6 mm UNI 6592	FAEMA 4054043102	FOR BREW GROUPS - PER GRUPPI EROGAZIONE
3528010	ø 12x6x1.6 mm UNI 6592	GRIMAC 1110400003-GR723	FOR BREW GROUPS - PER GRUPPI EROGAZIONE
3528010	ø 12x6x1.6 mm UNI 6592	PAVONI 401061	FOR BREW GROUPS - PER GRUPPI EROGAZIONE
3528010	ø 12x6x1.6 mm UNI 6592	SPAZIALE 01746	FOR BREW GROUPS - PER GRUPPI EROGAZIONE
1528008	ø 16x8x1.6 mm UNI 6592	BRASILIA 01290.0.00.03	FOR BREW GROUPS - PER GRUPPI EROGAZIONE
1528008	ø 16x8x1.6 mm UNI 6592	ELEKTRA 01816035	FOR BREW GROUPS - PER GRUPPI EROGAZIONE
1528008	ø 16x8x1.6 mm UNI 6592	GAGGIA WGAUN6592-8Z	FOR BREW GROUPS - PER GRUPPI EROGAZIONE
1528008	ø 16x8x1.6 mm UNI 6592	PAVONI 401065	FOR BREW GROUPS - PER GRUPPI EROGAZIONE
1528008	ø 16x8x1.6 mm UNI 6592	SPAZIALE 00416	FOR BREW GROUPS - PER GRUPPI EROGAZIONE

GRIMAC

LF Code	Dimensions	Suitable for	Notes
1528008	ø 16x8x1.6 mm UNI 6592	VIBIEMME VITERONGR8MA	FOR BREW GROUPS - PER GRUPPI EROGAZIONE
1528008	ø 16x8x1.6 mm UNI 6592	RENEKA 9001335	FOR STEAM/WATER TAPS - PER RUBINETTI VAPORE/ACQUA
1528008	ø 16x8x1.6 mm UNI 6592	VIBIEMME RACCROPIRU	FOR STEAM/WATER TAPS - PER RUBINETTI VAPORE/ACQUA
1528020	ø 18x8x1.3 mm UNI 6593	PROMAC 32239044	FOR STEAM/WATER TAPS - PER RUBINETTI VAPORE/ACQUA
1528020	ø 18x8x1.3 mm UNI 6593	RANCILIO 32239044	FOR STEAM/WATER TAPS - PER RUBINETTI VAPORE/ACQUA
1186504	ø 20x10.6x2 mm UNI 6592	FAEMA 4041135933	FOR BREW GROUPS - PER GRUPPI EROGAZIONE
1186504	ø 20x10.6x2 mm UNI 6592	PROMAC 39520008	FOR BREW GROUPS - PER GRUPPI EROGAZIONE
1186504	ø 20x10.6x2 mm UNI 6592	RANCILIO 39520008	FOR BREW GROUPS - PER GRUPPI EROGAZIONE
3528211	ø 28x15x2.5 mm UNI 6592	PAVONI 401075	FOR STEAM/WATER TAPS - PER RUBINETTI VAPORE/ACQUA

WASHERS VARIOUS

LF Code	Dimensions	Suitable for	Notes
1528054	ø 12x5x1 mm	ASTORIA/CMA 23260014	FOR BREW GROUPS - PER GRUPPI EROGAZIONE
1528059	ø 18x6.5x1.5 mm	BFC 0540030	FOR STEAM/WATER TAPS - PER RUBINETTI VAPORE/ACQUA
1186036	ø 21.5x6.5x2 mm	BIANCHI 18004971	FOR STEAM/WATER TAPS - PER RUBINETTI VAPORE/ACQUA
1528059	ø 18x6.5x1.5 mm	CARIMALI 93.00058	FOR STEAM/WATER TAPS - PER RUBINETTI VAPORE/ACQUA
1186299	ø 22x16x1 mm	CASADIO 590715000	FOR STEAM/WATER TAPS - PER RUBINETTI VAPORE/ACQUA
1186299	ø 22x16x1 mm	CIMBALI 590-715-000	FOR STEAM/WATER TAPS - PER RUBINETTI VAPORE/ACQUA
1186036	ø 21.5x6.5x2 mm	EXPOBAR 25012521	FOR STEAM/WATER TAPS - PER RUBINETTI VAPORE/ACQUA
1186299	ø 22x16x1 mm	FAEMA 590715000	FOR STEAM/WATER TAPS - PER RUBINETTI VAPORE/ACQUA
1186399	ø 30x17x3 mm	GAGGIA WGAUN6592-17Z	FOR LEVEL - PER LIVELLO
1186299	ø 22x16x1 mm	GRIMAC 1300900055-G207	FOR STEAM/WATER TAPS - PER RUBINETTI VAPORE/ACQUA
1528059	ø 18x6.5x1.5 mm	MARZOCCO L165/9	FOR STEAM/WATER TAPS - PER RUBINETTI VAPORE/ACQUA
1186036	ø 21.5x6.5x2 mm	MARZOCCO L165/9B	FOR STEAM/WATER TAPS - PER RUBINETTI VAPORE/ACQUA
1186399	ø 30x17x3 mm	NUOVA SIMONELLI 00200011	FOR STEAM/WATER TAPS - PER RUBINETTI VAPORE/ACQUA
1186399	ø 30x17x3 mm	SAECO WGAUN6592-17Z	FOR LEVEL - PER LIVELLO
1186142	ø 23x15x0.5 mm	SAN MARCO 205584	FOR STEAM/WATER TAPS - PER RUBINETTI VAPORE/ACQUA
1528059	ø 18x6.5x1.5 mm	SANREMO 10402040	FOR STEAM/WATER TAPS - PER RUBINETTI VAPORE/ACQUA
1186416	ø 15x11x2 mm	SPAZIALE 00523	FOR STEAM/WATER TAPS - PER RUBINETTI VAPORE/ACQUA
1528141	ø 22x6.5x5 mm	VIBIEMME RACCROBLMAEVO	FOR STEAM/WATER TAPS - PER RUBINETTI VAPORE/ACQUA
1528054	ø 12x5x1 mm	WEGA WY23260014	FOR BREW GROUPS - PER GRUPPI EROGAZIONE

WATER FILTERS

Photo	LF Code	Dimensions	Suitable for
1	1160017	ø 8x1.5 mm	SPAZIALE 02284
1	1160511	ø 9x1.5 mm	CIMBALI 481-361-000
1	1160023	ø 11x2 mm	SAN MARCO 202232
1	1160068	ø 18 mm	CASADIO 490055000 - CIMBALI 490-055-000
2	1160400	ø 11 mm	ASTORIA/CMA 10254 - WEGA WY10254
3	1160501	ø 14x10x12 mm	ASTORIA/CMA 10252 - BEZZERA 5471002

GRIMAC

Photo	LF Code	Dimensions	Suitable for
3	1160501	ø 14x10x12 mm	BRASILIA 00086.0.00.04 - PAVONI 330051
4	1160021	ø 18x20 mm	ELEKTRA 00111035
5	1160801	M8x1	RANCILIO 10705003
6	1160012	ø 11 mm	RANCILIO 10706070

WATER FILTERS

1 2 3 4 5

Photo	LF Code	Dimensions	Suitable for
1	1160523	ø 5.9 mm	CARIMALI 14.00795
1	1160311	ø 7 mm	BIANCHI 43144416 - FUTURMAT 07362205
2	1160536	ø 7 mm	SPAZIALE 00275
1	1160566	ø 8 mm	ASTORIA/CMA 10251001 - WEGA WY10251001
1	1160566	ø 8 mm	NUOVA SIMONELLI 98004001
1	1160011	ø 9 mm	BRASILIA 09756.0.00.04 - CIMBALI 4771-116-081
1	1160516	ø 11 mm	ASTORIA/CMA 10251002 - FUTURMAT 02435808
3	1160519	ø 14 mm	PAVONI 326202
4	1160346	ø 14 mm	CONTI 327154
5	1160087	ø 15 mm	SANREMO 10052139A

WATER FILTERS

1 2 3 4

Photo	LF Code	Dimensions	Suitable for
1	1160507	ø 8.5x15 mm	FUTURMAT 08298700
2	1160517	ø 8.5x22 mm	GROUP E61
3	1160074	ø 8.5x25 mm	CIMBALI 533-100-400
4	1160338	ø 8x13 mm	CONTI 403458

GRIMAC

WATER INLET TAPS GRIMAC

1 2

Photo	LF Code	Notes	Suitable for	For machine model
1	1348706	---	GRIMAC 2200600006-GR001	ECLISSE - TEN - TWENTY - ZOLAI - ZOLAII
2	1358001	---	GRIMAC A2200202	G11

WATER TANKS AND ACCESSORIES GRIMAC

1 2

Photo	LF Code	Suitable for	For machine model
1	1080183	GRIMAC 1210700006-MG657	AMBRA - DADAVAPORDOUBLE - NUVOLA - OPALE - TERRY
2	1080182	GRIMAC 1210900004-MG669	AMBRA - DADAVAPORDOUBLE - NUVOLA - OPALE - TERRY

GRIMAC

Suitable for:

Suitable for:

Clamps

1168011 STAINLESS STEEL CLAMP FOR FLANGE PUMP

GRIMAC

Lubricants

1180502 SILICONE GREASE 55 100 g

for dynamic lubrication between rubber and metal
it does not change its consistency when changing temperature. Water resistant
operating temperature -65/+175°C
not for the food industry

GRIMAC V066

GRIMAC 1010300002

Pilot burners and accessories

3020081 OLIVE FOR 6 mm ø PIPE

GRIMAC MG268

GRIMAC 1230700004

The data herewith contained may change without notice and LF SpA cannot be held responsible for possible errors stated or resulting by the use of this document. All rights reserved. No part of this publication may be reproduced without written permission by LF SpA.

Distributing Components, Spare Parts & Accessories
in original quality worldwide

LF SpA HEADQUARTERS
via Voltri, 80 - 47522 Cesena (FC) ITALY
Tel. +39 0547 34 11 11 - Fax +39 0547 34 11 10
www.lfricambi724.it - www.lfricambi724.mobi - info@lfricambi.it
Export Dept.: Tel. +39 0547 34 11 50 - Fax: +39 0547 34 11 55
www.lfspareparts724.com - www.lfspareparts724.mobi
export@lfspareparts.com

EPGC Sas FRANCE
13, Rue des Forts - 59960 Neuville en Ferrain
Tel. +33 (0)3 20 25 06 21
Fax +33 (0)3 20 25 34 12
www.epgc.com
www.epgc724.mobi
epgc@epgc.com

LF GmbH GERMANY
Junkersstrasse, 1 - D-82178 Puchheim - München
Tel. +49 89 89 45 78 66
Fax +49 89 89 45 78 88
www.lfersatzteile724.de
www.lfersatzteile724.mobi
info@lfersatzteile.de

LF China REPUBLIC OF CHINA
Room 403, No.2, Huadu Mansion, Lane 422, Huanghua Rd.
Minhang Dist. - 201103 Shanghai
Tel. +86 (0)21 33 53 66 31
Fax +86 (0)21 33 53 66 32
www.lfspareparts724.com
www.lfspareparts724.mobi
china@lfspareparts.com

OOO LF RUSSIAN FEDERATION
Ul. Anatoliya Zhivova, 8 - office 1 - 123100 Moscow
Tel. +7 499 259 85 75
Fax +7 495 725 26 53
www.lfspareparts724.ru
www.lfspareparts724.mobi
info@lfspareparts.ru

LF Repuestos Horeca S.L.U. SPAIN
Calle Ciudad Real, 10 - 45517 Escalonilla - Toledo
Tel. +34 91 477 91 00
Fax +34 91 477 90 81
www.lfrepuestos-horeca724.es
www.lfrepuestos724.mobi
info@lfrepuestos.es

LF SpA Cesena (IT) Swiss Branch Steinhausen SWITZERLAND
Sennweidstrasse, 45 - CH-6312 Steinhausen
Tel. +41 (0)41 760 15 80-1
Fax +41 (0)41 760 15 85
www.lfersatzteile724.ch
www.lfersatzteilech724.mobi
info@lfersatzteile.ch

LF Spare Parts Ltd. UNITED KINGDOM
A10a Lakeside Business Park, Broadway Lane
South Cerney, Gloucestershire GL7 5XL
Tel. +44 (0)1285 86 16 25
Fax +44 (0)1285 86 39 49
www.lfspareparts724.co.uk
www.lfspareparts724.mobi
info@lfspareparts.co.uk

AUSTRALIA AND NEW ZEALAND
www.lfspareparts724.com
andrea.calvio@lfspareparts.com

AUSTRIA
www.lfspareparts724.at
ludwig.neier@lferstazteile.at

BALKAN COUNTRIES
www.lfspareparts724.com
matija.ramov@lfspareparts.com

BALTIC COUNTRIES
www.lfspareparts724.com
inara.silina@lfspareparts.com

CENTRAL AND EASTERN EUROPE
www.lfspareparts724.cz
jiri.kremla@lfspareparts.cz

DENMARK
www.lfspareparts724.dk
michael.leth@lfspareparts.com

SOUTH KOREA
www.lfspareparts724.com
fabio.doni@lfspareparts.com

TURKEY
www.lfyedekparca724.com
basar.ergun@lfyedekparca.com

USA AND CANADA
www.lfspareparts724.us
sauro.dallaglio@lfspareparts.us
howard.truitt@lfspareparts.us